SECTION-I,
SUB-SECTION-C3

TECHNICAL SPECIFICATION OF AGITATORS
(ELECTRICAL PORTION)

1.0 **EQUIPMENT & SERVICES TO BE PROVIDED BY BIDDER:**

a) Services and equipment as per "Electrical Scope between BHEL and Vendor".

b) Any item/work either supply of equipment or erection material which have not been specifically mentioned but are necessary to complete the work for trouble free and efficient operation of the plant shall be deemed to be included within the scope of this specification. The same shall be provided by the bidder without any extra charge.

c) Supply of mandatory spares as specified in the specifications of mechanical equipments.

d) Electrical load requirement for **AGITATOR.**

e) All equipment shall be suitable for the power supply fault levels and other climatic conditions mentioned in the enclosed project information.

f) Bidder to furnish list of makes for each equipment at contract stage, which shall be subject to customer/BHEL approval without any commercial and delivery implications to BHEL

g) Various drawings, data sheets as per required format, Quality plans, calculations, test reports, test certificates, operation and maintenance manuals etc shall be furnished as specified at contract stage. All documents shall be subject to customer/BHEL approval without any commercial implication to BHEL.

h) Motor shall meet minimum requirement of motor specification.

i) Vendor to clearly indicate equipment locations and local routing lengths in their cable listing furnished to BHEL.

j) Cable BOQ worked out based on routing of cable listing provided by the vendor for " both end equipment in vendor's scope"shall be binding to the vendor with +10 % margin to take care of slight variation in routing length & wastages.

2.0 **EQUIPMENT & SERVICES TO BE PROVIDED BY PURCHASER FOR ELECTRICAL & TERMINAL POINTS:**

Refer "Electrical Scope between BHEL and Vendor".

3.0 DOCUMENTS TO BE SUBMITTED ALONG WITH BID

3.1 The electrical specification without any deviation from the technical/quality assurance requirements stipulated shall be deemed to be complied by the bidder in case bidder furnishes the overall compliance of package technical specification in the form of

compliance certificate/No deviation certificate.

3.2 No technical submittal such as copies of data sheets, drawings, write-up, quality plans, type test certificates, technical literature, etc, is required during tender stage. Any such submission even if made, shall not be considered as part of offer.

4.0 List of enclosures :

a) Electrical scope between BHEL & vendor

b) Customer (NTPC) specification for Motors

c) Customer (NTPC) specification for cable lugs and glands

d) Quality plan for motors & NTPC quality assurance

e) Datasheet A & C (Annexure- I)

f) Electrical Load data format (Annexure –II)

g) BHEL cable listing format (Annexure –III)

REV: 0 DATE: 24.03.2020

STANDARD ELECTRICAL SCOPE BETWEEN BHEL AND VENDOR
PACKAGE: AGITATOR (Supply Package)

PROJECT: 2X250 MW BHILAI EXPANSION POWER PROJECT

S.NO	DETAILS	SCOPE SUPPLY	SCOPE E&C	REMARKS
1	415 V MCC	BHEL	BHEL	415 V AC (3 PHASE 4 WIRE) supply shall be provided by BHEL based on load data provided by vendor at contract stage for all equipment supplied by vendor as part of contract. Any other voltage level (AC/DC) required will be derived by the vendor.
2	Local Push Button Station (for motors)	BHEL	BHEL	Located near the motors.
3	Power cables, control cables and screened control cables	BHEL	BHEL	Incoming cable from BHEL supplied MCC will be informed by BHEL. Vendor shall provide lugs & glands accordingly.
4	Cable trays, accessories & cable trays supporting system	BHEL	BHEL	
5	Cable glands and lugs for equipments supplied by Vendor	Vendor	BHEL	1. Double compression Ni-Cr plated brass cable glands 2. Solder less crimping type heavy duty tinned copper lugs for power and control cables.
6	Conduit and conduit accessories for cabling between equipments supplied by vendor	BHEL	BHEL	
7	Equipment grounding & lightning protection	BHEL	BHEL	
8	Below grade grounding	BHEL	BHEL	
9	LT Motors with base plate and foundation hardware	Vendor	BHEL	Makes shall be subject to BHEL approval at contract stage.
10	Mandatory spares	Vendor	-	Vendor to quote as per specification.
11	Recommended O & M spares	Vendor	-	As per specification
12	Any other equipment/material/service required for completeness of system but not specified above (to ensure trouble free and efficient operation of the system).	Vendor	BHEL	
13	Electrical equipment GA drawing	Vendor	-	For necessary interface review.

NOTES:

1. Make of all electrical equipments/items supplied shall be reputed make & shall be subject to approval of BHEL after award of contract.
2. All QPs shall be subject to approval of BHEL after award of contract without any commercial implication.

SUB-SECTION-II-E2

MOTORS

MOTORS

1.00.00 GENERAL REQUIREMENTS

1.01.00 For the purpose of design of equipment/systems, an ambient temperature of 50 deg. Centigrade and relative humidity of 95% (at 40 deg C) shall be considered. The equipment shall operate in a highly polluted environment.

1.02.00 All equipment's shall be suitable for rated frequency of 50 Hz with a variation of +3% & -5%, and 10% combined variation of voltage and frequency unless specifically brought out in the specification.

1.03.00 Contactor shall provide fully compatible electrical system, equipment's, accessories and services.

1.04.00 All the equipment, material and systems shall, in general, conform to the latest edition of relevant National and international Codes & Standards, especially the Indian Statutory Regulations.

1.05.00 Paint shade shall be as per RAL 5012 (Blue) for indoor and outdoor equipment.

1.06.00 The responsibility of coordination with electrical agencies and obtaining all necessary clearances for Contactors equipment and systems shall be under the Contactor scope.

1.07.00 Degree of Protection

Degree of protection for various enclosures as per IEC60034-05 shall be as follows :-

i)	Indoor motors	-	IP 54
ii)	Outdoor motors	-	IP 55
iii)	Cable box-indoor area	-	IP 54
iv)	Cable box-Outdoor area	-	IP 55

2.00.00 CODES AND STANDARDS

1)	Three phase induction motors	:	IS/IEC:60034
2)	Single phase AC motors	:	IS/ IEC:60034
3)	Crane duty motors	:	IS:3177, IS/IEC:60034
4)	DC motors/generators	:	IS:4722, IS/IEC:60034
5)	Energy Efficient motors	:	IS 12615, IEC:60034-30

3.00.00 **TYPE**

3.01.00 **AC Motors:**

a) Squirrel cage induction motor suitable for direct-on-line starting.

b) Continuous duty LT motors upto 200 KW Output rating (at 50 deg.C ambient temperature), shall be **Premium Efficiency class-IE3**, conforming to IS 12615, or IEC:60034-30.

c) Crane duty motors shall be slip ring/ squirrel cage Induction motor as per the requirement.

d) Motor operating through variable frequency drives shall be suitable for inverter duty. Also these motors shall comply the requirements stipulated in IEC: 60034-18-41 and IEC: 60034-18-42 as applicable.

3.02.00 DC Motors Shunt wound.

4.00.00 **RATING**

(a) Continuously rated (S1). However, crane motors shall be rated for S4 duty, 40% cyclic duration factor.

(b) Whenever the basis for motor or driven equipment ratings are not specified in the corresponding mechanical specification sub-sections, maximum continuous motor ratings shall be at least 10% above the maximum load demand of the driven equipment under entire operating range including voltage and frequency variations.

5.00.00 **TEMPERATURE RISE**

Air cooled motors

70 deg. C by resistance method for both thermal class 130(B) & 155(F) insulation.

Water cooled

80 deg. C over inlet cooling water temperature mentioned elsewhere, by resistance method for both thermal class 130(B) & 155(F) insulation.

6.00.00 **OPERATIONAL REQUIREMENTS**

6.01.00 **Starting Time**

6.01.01 For motors with starting time upto 20 secs. at minimum permissible voltage during starting, the locked rotor withstand time under hot condition at highest voltage limit shall be at least 2.5 secs. more than starting time.

6.01.02 For motors with starting time more than 20 secs. and upto 45 secs. at minimum permissible voltage during starting, the locked rotor withstand time under hot condition at highest voltage limit shall be at least 5 secs. more than starting time.

6.01.03 For motors with starting time more than 45 secs. at minimum permissible voltage during starting, the locked rotor withstand time under hot condition at highest voltage limit shall be more than starting time by at least 10% of the starting time.

6.01.04 Speed switches mounted on the motor shaft shall be provided in cases where above requirements are not met.

6.02.00 **Torque Requirements**

6.02.01 Accelerating torque at any speed with the lowest permissible starting voltage shall be at least 10% motor full load torque.

6.02.02 Pull out torque at rated voltage shall not be less than 205% of full load torque. It shall be 275% for crane duty motors.

6.03.00 **Starting voltage requirement**

(a) Up to 85% of rated voltage for ratings below 110 KW

(b) Up to 80% of rated voltage for ratings from 110 KW to 200 KW

(c) Up to 85% of rated voltage for ratings from 201 KW to 1000 KW

(d) Up to 80% of rated voltage for ratings from 1001 KW to 4000 KW

(e) Up to 75 % of rated voltage for ratings above 4000KW

7.00.00 DESIGN AND CONSTRUCTIONAL FEATURES

7.01.00 Suitable single phase space heaters shall be provided on motors rated 30KW and above to maintain windings in dry condition when motor is standstill. Separate terminal box for space heaters & RTDs shall be provided. However for flame proof motors, space heater terminals inside the main terminal box may be acceptable.

7.02.00 All motors shall be either Totally enclosed fan cooled (TEFC) or totally enclosed tube ventilated (TETV) or Closed air circuit air cooled (CACA) type. However, motors rated 3000KW or above can be Closed air circuit water cooled (CACW). The method of movement of primary and secondary coolant shall be self-circulated by fan or pump directly mounted on the rotor of the main motor as per IEC 60034-6. However VFD driven motors can be offered with forced cooling type with machine mounted fan or pump driven by separate electric motor. Motors and EPB located in hazardous areas shall have flame proof enclosures conforming to IS:2148 as detailed below

(a) Fuel oil area : Group – IIB

(b) Hydrogen generation : Group - IIC or (Group-I, Div-II as per plant area NEC) or (Class-1, Group-B, Div-II as per NEMA /IEC60034)

7.03.00 Winding and Insulation

(a)	Type	:	Non-hygroscopic, oil resistant, flame resistant
(b)	Starting duty	:	Two hot starts in succession, with motor initially at normal running temperature.
(c)	11kV & 3.3 kV AC motors	:	Thermal class 155 (F) insulation. The winding insulation process shall be total Vacuum Presure Impregnated i.e resin poor method. The lightning Impulse & interturn insulation surge withstand level shall be as per IEC-60034 part-15.
(d)	240VAC, 415V AC & 220V DC motors	:	Thermal Class (B) or better

7.04.00 Motors rated above 1000KW shall have insulated bearings to prevent flow of shaft currents.

7.05.00 Motors with heat exchangers shall have dial type thermometer with adjustable alarm contacts to indicate inlet and outlet primary air temperature.

7.06.00 Noise level for all the motors shall be limited to 85 dB(A) except for BFP motor for which the maximum limit shall be 90dB(A). Vibration shall be limited within the limits prescribed in IS:12075 / IEC 60034-14 . Motors shall withstand vibrations produced by driven equipment. HT motor bearing housings shall have flat surfaces, in both X and Y directions, suitable for mounting 80mmX80mm vibration pads.

7.07.00 In HT motors, at least four numbers simplex / two numbers duplex platinum resistance type temperature detectors shall be provided in each phase stator winding. Each bearing of HT motor shall be provided with dial type thermometer with adjustable alarm contact and preferably 2 numbers duplex platinum resistance type temperature detectors.

7.08.00 Motor body shall have two earthing points on opposite sides.

7.09.00 11 KV motors shall be offered with Separable Insulated Connector (SIC) as per IEEE 386. The offered SIC terminations shall be provided with protective cover and trifurcating sleeves. SIC termination kit shall be suitable for fault level of 25 KA for 0.17 seconds.

7.10.00 3.3 KV motors shall be offered with dust tight phase separated double walled (metallic as well as insulated barrier) Terminal box. Employer shall provide termination kit for the offered Terminal box. The offered Terminal Box shall be suitable for fault level of 250 MVA for 0.12 sec. Removable gland plates of thickness 3 mm (hot/cold rolled sheet steel) or 4 mm (non magnetic material for single core cables) shall be provided.

7.11.00 The spacing between gland plate & centre of terminal stud shall be as per Table-I.

7.12.00 All motors shall be so designed that maximum inrush currents and locked rotor and pullout torque developed by them at extreme voltage and frequency variations do not endanger the motor and driven equipment.

7.13.00 The motors shall be suitable for bus transfer schemes provided on the 11kV, 3.3 kV /415V systems without any injurious effect on its life.

7.14.00 For motors rated 2000 KW & above, neutral current transformers of PS class shall be provided on each phase in a separate neutral terminal box.

7.15.00 The size and number of cables (for HT motors) to be intimated to the successful Contactor during detailed engineering and the Contactor shall provide terminal box suitable for the same.

8.00.00 The ratio of locked rotor KVA at rated voltage to rated KW shall not exceed the following (without any further tolerance):

(a) From 50KW & upto 110KW	:	11.0
(b) From 110 KW & upto 200 KW	:	9.0
(c) Above 200 KW & upto 1000KW	:	10.0
(d) From 1001KW & upto 4000KW	:	9.0
(e) Above 4000KW	:	6 to 6.5

10.00.00 TYPE TEST

10.01.00 **HT MOTORS**

10.01.01 The Contactor shall carry out the type tests as listed in this specification on the equipment to be supplied under this contract. The Contactor shall indicate the charges for each of these type tests separately in the relevant schedule of Section - VII- (BPS) and the same shall be considered for the evaluation of the bids. The type tests charges shall be paid only for the test(s) actually conducted successfully under this contract and upon certification by the Employer's engineer.

10.01.02 The type tests shall be carried out in presence of the Employer's representative, for which minimum 15 days notice shall be given by the Contactor. The Contactor shall obtain the Employer's approval for the type test procedure before conducting the type test. The type test procedure shall clearly specify the test set–up, instruments to be used, procedure, acceptance norms, recording of different parameters, interval of recording, precautions to be taken etc. for the type test(s) to be carried out.

10.01.03 In case the Contactor has conducted such specified type test(s) within last ten years as on the date of bid opening, he may submit during detailed engineering

the type test reports to the Employer for waival of conductance of such test(s). These reports should be for the tests conducted on the equipment similar to those proposed to be supplied under this contract and test(s) should have been either conducted at an independent laboratory or should have been witnessed by a client. The Employer reserves the right to waive conducting of any or all the specified type test(s) under this contract. In case type tests are waived, the type test charges shall not be payable to the Contactor.

10.01.04 Further the Contactor shall only submit the reports of the type tests as listed in "LIST OF TESTS FOR WHICH REPORTS HAVE TO BE SUBMITTED" and carried out within last ten years from the date of bid opening. These reports should be for the test conducted on the equipment similar to those proposed to be supplied under this contract and the test(s) should have been either conducted at an independent laboratory or should have been witnessed by a client. However if the Contactor is not able to submit report of the type test(s) conducted within last ten years from the date of bid opening, or in the case of type test report(s) are not found to be meeting the specification requirements, the Contactor shall conduct all such tests under this contract at no additional cost to the Employer either at third party lab or in presence of client/Employers representative and submit the reports for approval.

10.01.05 **LIST OF TYPE TESTS TO BE CONDUCTED**

The following type tests shall be conducted on each type and rating of HT motor

(a) No load saturation and loss curves upto approximately 115% of rated voltage

(b) Measurement of noise at no load.

(c) Momentary excess torque test (subject to test bed constraint).

(d) Full load test(subject to test bed constraint)

(e) Temperature rise test at rated conditions. During heat run test, bearing temp., winding temp.,coolant flow and its temp. shall also be measured. In case the temperature rise test is carried at load other than rated load, specific approval for the test method and procedure is required to be obtained. Wherever ETD's are provided, the temperature shall be measured by ETD's also for the record purpose.

10.01.06 **LIST OF TESTS FOR WHICH REPORTS HAVE TO BE SUBMITTED**

The following type test reports shall be submitted for each type and rating of HT motor

(a) Degree of protection test for the enclosure followed by IR, HV and no load run test.

(b) Terminal box-fault level withstand test for each type of terminal box of HT motors only.

(c) Lightning Impulse withstand test on the sample coil shall be as per clause no. 4.3 IEC-60034, part-15

(d) Surge-withstand test on inter-turn insulation shall be as per clause no. 4.2 of IEC 60034, part-15

10.02.00 **LT Motors**

10.02.01 LT Motors supplied shall be of type tested design. During detailed engineering, the Contactor shall submit for Employer's approval the reports of all the type tests as listed in this specification and carried out within last *ten* years from the date of bid opening. These reports should be for the test conducted on the equipment similar to those proposed to be supplied under this contract and the test(s) should have been either conducted at an independent laboratory or should have been witnessed by a client.

10.02.02 However if the Contactor is not able to submit report of the type test(s) conducted within last ten years from the date of bid opening, or in the case of type test report(s) are not found to be meeting the specification requirements, the Contactor shall conduct all such tests under this contract at no additional cost to the Employer either at third party lab or in presence of client/Employers representative and submit the reports for approval.

10.02.03 **LIST OF TESTS FOR WHICH REPORTS HAVE TO BE SUBMITTED**

The following type test reports shall be submitted for each type and rating of LT motor of above 50 KW only

1. Measurement of resistance of windings of stator and wound rotor.
2. No load test at rated voltage to determine input current power and speed
3. Open circuit voltage ratio of wound rotor motors (in case of Slip ring motors)
4. Full load test to determine efficiency power factor and slip
5. Temperature rise test
6. Momentary excess torque test.
7. High voltage test
8. Test for vibration severity of motor.
9. Test for noise levels of motor(Shall be limited as per clause no 7.06.00 of this section)

10. Test for degree of protection and

11. Overspeed test.

12. Type test reports for motors located in fuel oil area having flame proof enclosures as per IS 2148 / IEC 60079-1

10.03.00 All acceptance and routine tests as per the specification and relevant standards shall be carried out. Charges for these shall be deemed to be included in the equipment price.

10.04.00 The type test reports once approved for any projects shall be treated as reference. For subsequent projects of NTPC, an endorsement sheet will be furnished by the manufacturer confirming similarity and "No design Change". Minor changes if any shall be highlighted on the endorsement sheet.

TABLE - I

DIMENSIONS OF TERMINAL BOXES FOR LV MOTORS

Motor MCR in KW of	Minimum distance between centre stud and gland plate in mm
UP to 3 KW	As per manufacturer's practice.
Above 3 KW - upto 7 KW	85
Above 7 KW - upto 13 KW	115
Above 13 KW - upto 24 KW	167
Above 24 KW - upto 37 KW	196
Above 37 KW - upto 55 KW	249
Above 55 KW - upto 90 KW	277
Above 90 KW - upto 125 KW	331
Above 125 KW-upto 200 KW	203

For HT motors the distance between gland plate and the terminal studs shall not be less than 500 mm.

PHASE TO PHASE/ PHASE TO EARTH AIR CLEARANCE:

NOTE: Minimum inter-phase and phase-earth air clearances for LT motors with lugs installed shall be as follows:

Motor MCR in KW	Clearance
UP to 110 KW	10mm
Above 110 KW and upto 150 KW	12.5mm
Above 150 KW	19mm

3.06.00 **Cable glands**

3.06.01 Cable shall be terminated using double compression type cable glands. Testing requirements of Cable glands shall conform to BS:6121 and gland shall be of robust construction capable of clamping cable and cable armour (for armoured cables) firmly without injury to insulation. Cable glands shall be made of heavy duty brass machine finished and nickel chrome plated. Thickness of plating shall not be less than 10 micron. All washers and hardware shall also be made of brass with nickel chrome plating Rubber components shall be of neoprene or better synthetic material and of tested quality. Cable glands shall be suitable for the sizes of cable supplied/erected.

3.07.00 **Cable lugs/ferrules**

3.07.01 Cable lugs/ferrules for power cables shall be tinned copper solderless crimping type suitable for aluminium compacted conductor cables. Cable lugs and ferrules for control cables shall be tinned copper type. The cable lugs for control cables shall be provided with insulating sleeve and shall suit the type of terminals provided on the equipments. Cable lugs and ferrule shall conform to IS/DIN standards.

3.08.00 **Trefoil clamps**

3.08.01 Trefoil clamps for single core cables shall be pressure die cast aluminum or fibre glass or nylon and shall include necessary fixing accessories like G.I. nuts, bolts, washers, etc. Trefoil clamps shall have adequate mechanical strength, when installed at 1 mtr intervals, to withstand the forces generated by the peak value of maximum system short circuit current.

3.09.00 **Cable Clamps & Ties**

3.09.01 The cable clamps/ties required to clamp multicore cables shall be of SS-316 material, 12mm wide, polyster coated ladder lock type. The clamps/ties shall have self locking arrangement & shall have sufficient strength. The cable clamps/ties shall be supplied in finished individual pieces of suitable length to meet the site requirements.

3.10.00 **Receptacles**

3.10.01 Receptacles boxes shall be fabricated out of MS sheet of 2mm thickness and hot dipped gavanised or of die-cast aluminium alloy of thickness not less than 2.5 mm. The boxes shall be provided with two nos. earthing terminals, gasket to achieve IP55 degree of protection, terminal blocks for loop-in loop-out for cable of specified sizes, mounting brackets suitable for surface mounting on wall/column/structure, gland plate etc. The ON-OFF switch shall be rotary type heavy duty, double break,AC23 category, suitable for AC supply. Plug and Socket shall be shrouded Die-cast aluminium. Socket shall be provided with lid safety cover. Robust mechanical interlock shall be provided such that the switch can be put ON only when the plug is fully engaged and plug can be withdrawn only when the switch is in OFF position. Also cover can be opened only when the switch is in OFF position. Wiring shall be carried out with 1100 V grade PVC insulated stranded aluminium/copper wire of adequate size. The Terminal blocks shall be of 1100 V grade. The Terminal blocks shall be of 1100 V grade made up of unbreakable polymide 6.6 grade with adequate current rating and size. The welding receptacles shall be provided with inbuilt ELCB rated for suitable mA sensitivity ranging from 30-300 mA .

3.11.00 **Cable Drum Lifting Jack**

The jack for cable drum lifting shall be of screw type with 10 ton capacity. The cable drum jacks shall be manufactured from fabricated steel. The spindles supplied with the cable drum jack shall be manufactured using BSEN-24 grade steel bar with locking collars. Jack nests shall be of SG cast steel. Cable drum jack supplied shall have undergone load testing and reports for the same shall be submitted. At least Two Nos. of jacks shall be supplied for

GENERAL TECHNICAL REQUIREMENTS

FOR

LV MOTORS

SPECIFICATION NO.: PE-SS-999-506-E101 Rev 00

1.0 INTENT OF SPECIFIATION

The specification covers the design, materials, constructional features, manufacture, inspection and testing at manufacturer's work, and packing of Low voltage (LV) squirrel cage induction motors along with all accessories for driving auxiliaries in thermal power station.

Motors having a voltage rating of below 1000V are referred to as low voltage (LV) motors.

2.0 CODES AND STANDARDS

Motors shall fully comply with latest edition, including all amendments and revision, of following codes and standards:

IS:325	Three phase Induction motors
IS : 900	Code of practice for installation and maintenance of induction motors
IS: 996	Single phase small AC and universal motors
IS: 4722	Rotating Electrical machines
IS: 4691	Degree of Protection provided by enclosures for rotating electrical machines
IS: 4728	Terminal marking and direction of rotation rotating electrical machines
IS: 1231	Dimensions of three phase foot mounted induction motors
IS: 8789	Values of performance characteristics for three phase induction motors
IS: 13555	Guide for selection and application of 3-phase A.C. induction motors for different types of driven equipment
IS: 2148	Flame proof enclosures for electrical appliance
IS: 5571	Guide for selection of electrical equipment for hazardous areas
IS: 12824	Type of duty and classes of rating assigned
IS: 12802	Temperature rise measurement for rotating electrical machnines
IS: 12065	Permissible limits of noise level for rotating electrical machines
IS: 12075	Mechanical vibration of rotating electrical machines

In case of imported motors, motors as per IEC-34 shall also be acceptable.

3.0 DESIGN REQUIREMENTS

3.1 Motors and accessories shall be designed to operate satisfactorily under conditions specified in data sheet-A and Project Information, including voltage & frequency variation of supply system as defined in Data sheet-A

3.2 Motors shall be continuously rated at the design ambient temperature specified in Data Sheet-A and other site conditions specified under Project Information
Motor ratings shall have at least a 15% margin over the continuous maximum demand of the driven equipment, under entire operating range including voltage & frequency variation specified above.

3.3 Starting Requirements

3.3.1 Motor characteristics such as speed, starting torque, break away torque and starting time shall be properly co-ordinated with the requirements of driven equipment. The accelerating torque at any speed with the minimum starting voltage shall be at least 10% higher than that of the driven equipment.

3.3.2 Motors shall be capable of starting and accelerating the load with direct on line starting without exceeding acceptable winding temperature.

The limiting value of voltage at rated frequency under which a motor will successfully start and accelerate to rated speed with load shall be taken to be a constant value as per Data Sheet - A during the starting period of motors.

3.3.3 The following frequency of starts shall apply

i) Two starts in succession with the motor being initially at a temperature not exceeding the rated load temperature.

ii) Three equally spread starts in an hour the motor being initially at a temperature not exceeding the rated load operating temperature. (not to be repeated in the second successive hour)

iii) Motors for coal conveyor and coal crusher application shall be suitable for three consecutive hot starts followed by one hour interval with maximum twenty starts per day and shall be suitable for mimimum 20,000 starts during the life time of the motor

3.4 **Running Requirements**

3.4.1 Motors shall run satisfactorily at a supply voltage of 75% of rated voltage for 5 minutes with full load without injurious heating to the motor.

3.4.2 Motor shall not stall due to voltage dip in the system causing momentary drop in voltage upto 70% of the rated voltage for duration of 2 secs.

3.5 **Stress During bus Transfer**

3.5.1 Motors shall withstand the voltage, heavy inrush transient current, mechanical and torque stress developed due to the application of 150% of the rated voltage for at least 1 sec. caused due to vector difference between the motor residual voltage and the incoming supply voltage during occasional auto bus transfer.

3.5.2 Motor and driven equipment shafts shall be adequately sized to satisfactorily withstand transient torque under above condition.

3.6 Maximum noise level measured at distance of 1.0 metres from the outline of motor shall not exceed the values specified in IS 12065.

3.7 The max. vibration velocity or double amplitude of motors vibration as measured at motor bearings shall be within the limits specified in IS: 12075.

4.0 **CONSTRUCTIONAL FEATURES**

4.1 Indoor motors shall conform to degree of protection IP: 54 as per IS: 4691. Outdoor or semi-indoor motors shall conform to degree of protection IP: 55 as per IS: 4691and shall be of weather-proof construction. Outdoor motors shall be installed under a suitable canopy

4.2 Motors upto 160KW shall have Totally Enclosed Fan Cooled (TEFC) enclosures, the method of cooling conforming to IC-0141 or IC-0151 of IS: 6362.

Motors rated above 160 KW shall be Closed Air Circuit Air (CACA) cooled

4.3 Motors shall be designed with cooling fans suitable for both directions of rotation.

4.4. Motors shall not be provided with any electric or pneumatic operated external fan for cooling the motors.

4.5 Frames shall be designed to avoid collection of moisture and all enclosures shall be provided with facility for drainage at the lowest point.

4.6 In case Class 'F' insulation is provided for LV motors, temperature rise shall be limited to the limits applicable to Class 'B' insulation.
In case of continuous operation at extreme voltage limits the temperature limits specified in table-1 of IS:325 shall not exceed by more than 10°C.

4.7 **Terminals and Terminal Boxes**

4.7.1 Terminals, terminal leads, terminal boxes, windings tails and associated equipment shall be suitable for connection to a supply system having a short circuit level, specified in the Data Sheet-A.

Unless otherwise stated in Data Sheet-A, motors of rating 110 kW and above will be controlled by circuit breaker and below 110 kW by switch fuse-contactor. The terminal box of motors shall be designed for the fault current mentioned in data sheet "A".

4.7.2 unless otherwise specified or approved, phase terminal boxes of horizontal motors shall be positioned on the left hand side of the motor when viewed from the non-driving end.

4.7.3 Connections shall be such that when the supply leads R, Y & B are connected to motor terminals A B & C or U, V & W respectively, motor shall rotate in an anticlockwise direction when viewed from the non-driving end. Where such motors require clockwise rotation, the supply leads R, Y, B will be connected to motor terminals A, C, B or U W & V respectively.

4.7.4 Permanently attached diagram and instruction plate made preferably of stainless steel shall be mounted inside terminal box cover giving the connection diagram for the desired direction of rotation and reverse rotation.

4.7.5 Motor terminals and terminal leads shall be fully insulated with no bar live parts. Adequate space shall be available inside the terminal box so that no difficulty is encountered for terminating the cable specified in Data Sheet-A.

4.7.6 Degree of protection for terminal boxes shall be IP 55 as per IS 4691.

4.7.7 Separate terminal boxes shall be provided for space heaters.. If this is not possible in case of LV motors, the space heater terminals shall be adequately segregated from the main terminals in the main terminal box. Detachable gland plates with double compression brass glands shall be provided in terminal boxes.

4.7.8. Phase terminal boxes shall be suitable for 360 degree of rotation in steps of 90 degree for LV motors.

4.7.9 Cable glands and cable lugs as per cable sizes specified in Data Sheet-A shall be included. Cable lugs shall be of tinned Copper, crimping type.

4.8 Two separate earthing terminals suitable for connecting G.I. or MS strip grounding conductor of size given in Data Sheet-A shall be provided on opposite sides of motor frame. Each terminal box shall have a grounding terminal.

4.9 **General**

4.9.1 Motors provided for similar drives shall be interchangeable.

4.9.2 Suitable foundation bolts are to be supplied alongwith the motors.

4.9.3 Motors shall be provided with eye bolts, or other means to facilitate safe lifting if the weight is 20Kgs. and above.

4.9.4 Necessary fitments and accessories shall be provided on motors in accordance with the latest Indian Electricity rules 1956.

4.9.5 All motors rated above 30 kW shall be provided with space heaters to maintain the motor internal air temperature above the dew point. Unless otherwise specified, space heaters shall be suitable for a supply of 240V AC, single phase, 50 Hz.

4.9.6 Name plate with all particulars as per IS: 325 shall be provided

4.9.7 Unless otherwise specified, the colour of finish shall be grey to Shade No. 631 and 632 as per IS:5 for motors installed indoor and outdoor respectively. The paint shall be epoxy based and shall be suitable for withstanding specified site conditions.

5.0 INSPECTION AND TESTING

5.1 All materials, components and equipments covered under this specification shall be procured, manufactured, as per the BHEL standard quality plan No. PED-506-00-Q-006/0 and PED-506-00-Q-007/2 enclosed with this specification and which shall be complied.

5.2 LV motors of type-tested design shall be provided. Valid type test reports not more than 5 year shall be furnished. In the absence of these, type tests shall have to be conducted by manufacturer without any commercial implication to purchaser.

5.3 All motors shall be subjected to routine tests as per IS: 325 and as per BHEL standard quality plan.

5.4 Motors shall also be subjected to additional tests, if any, as mentioned in Data Sheet A.

6.0 DRAWINGS TO BE SUBMITTED AFTER AWARD OF CONTRACT

a) OGA drawing showing the position of terminal boxes, earthing connections etc.
b) Arrangement drawing of terminal boxes.
c) Characteristic curves:
(*To be given for motor above 55 kW unless otherwise specified in Data Sheet*).

i) Current vs. time at rated voltage and minimum starting voltage.
ii) Speed vs. time at rated voltage and minimum starting voltage.
iii) Torque vs. speed at rated voltage and minimum voltage.
For the motors with solid coupling the above curves i), ii), iii) to be furnished for the motors coupled with driven equipment. In case motor is coupled with mechanical equipment by fluid coupling, the above curves shall be furnished with and without coupling.
iv) Thermal withstand curve under hot and cold conditions at rated voltage and max. permissible voltage.

SUB-SECTION-V-QE1

MOTORS

बीएचईएल BHEL	MANUFACTURER/ BIDDER/ SUPPLIER NAME & ADDRESS	STANDARD QUALITY PLAN	SPEC. NO :	DATE:27.02.2020
		CUSTOMER :	QP NO.: PED-506-00-Q-006, REV-02	
		PROJECT:	PO NO.:	
		ITEM: AC ELECT. MOTORS UPTO 55KW (LV (415V)) / SYSTEM:	SECTION: II	SHEET 1 OF 2

Sl No.	Component & Operations	Characteristics	Class	Type of Check	Quantum Of check		Reference Document	Acceptance NORMS	FORMAT OF RECORD		AGENCY			
1	2	3	4	5	6		7	8	9	*	**			
					M	C/N				D	M	C	N	
1.0	ASSEMBLY	1.WORKMANSHIP	MA	VISUAL	100%	-	MFG. SPEC.	MFG. SPEC.	-DO-		P	-	-	
		2.DIMENSIONS	MA	-DO-	-DO-	-	MFG. DRG./ MFG. SPEC.	MFG. DRG./ MFG. SPEC.	-DO-		P	-	-	
		3.CORRECTNESS COMPLETENESS TERMINATIONS/ MARKING/COLOUR CODE	MA	VISUAL	100%	-	MFG.SPEC./	MFG.SPEC.	-DO-		P	-	-	
2.0	PAINTING	1.SHADE	MA	VISUAL	SAMPLE	-	MFG. SPEC/ APPROVED DATASHEET	SAME AS COL.7	LOG BOOK		P	-	-	
3.0	TESTS	1.ROUTINE TEST INCLUDING SPECIAL TEST	MA	-DO-	100%	100%	IS-325 / IS-12615/ APPROVED DATA SHEET	SAME AS COL.7	TEST/ INSPN. REPORT		P	W	W	NOTE -1 & NOTE-2
		2.OVERALL DIMENSIONS & ORIENTATION	MA	MEASUREMENT & VISUAL	100%	100%	APPROVED DRG/DATA SHEET	APPROVED DRG/DATA SHEET	TEST/ INSPN. REPORT		P	W	W	NOTE -1 & NOTE-2

BHEL					
ENGINEERING			QUALITY		
	Sign & Date	Name		Sign & Date	Name
Prepared by:	27/3/2020	Hema K.	Checked by:	02/3/2020	KUNAL GANDHI
Reviewed by:	02/3/2020	P. Dutta	Reviewed by:		

BIDDER/ SUPPLIER	
Sign & Date	
Seal	

FOR CUSTOMER REVIEW & APPROVAL			
Doc No:			
	Sign & Date	Name	Seal
Reviewed by:			
Approved by:			

बीएचईएल BHEL	MANUFACTURER/ BIDDER/ SUPPLIER NAME & ADDRESS	STANDARD QUALITY PLAN	SPEC. NO :	DATE:27.02.2020
		CUSTOMER :	QP NO.: PED-506-00-Q-006, REV-02	
		PROJECT:	PO NO.:	
		ITEM: AC ELECT. MOTORS UPTO 55KW (LV (415V)) / SYSTEM:	SECTION: II	SHEET 2 OF 2

Sl No.	Component & Operations	Characteristics	Class	Type of Check	Quantum Of check		Reference Document	Acceptance NORMS	FORMAT OF RECORD		AGENCY			
1	2	3	4	5	6		7	8	9	*	**			
					M	C/N				D	M	C	N	
		3.NAMEPLATE DETAILS	MA	VISUAL	100%	100%	IS-325 / IS-12615 / APPROVED DATA SHEET	SAME AS COL.7	TEST/ INSPN. REPORT		P	W	W	
4.0	PACKING	SURFACE FINISH & COMPLETENESS	MA	VISUAL	100%	100%	AS PER MFG. STANDARD / APPROVED PACKING DRAWING.(#)	AS PER MFG. STANDARD / APPROVED PACKING DRAWING.(#).	INSPC. REPORT		P	W	-	(#) APPLICABLE FOR EXPORT JOBS

NOTES:

1 ROUTINE TESTS ON 100% MOTORS SHALL BE DONE BY THE VENDOR. HOWEVER, BHEL/CUSTOMER SHALL WITNESS ROUTINE TESTS ON RANDOM SAMPLES. THE SAMPLING PLAN SHALL BE MUTUALLY AGREED UPON

2 FOR EXHAUST/VENTILATION FAN MOTORS OF RATING UPTO 1.5KW , ONLY ROUTINE TEST CERTIFICATES SHALL BE FURNISHED FOR SCRUTINY.

3 IN CASE TEST CERTIFICATES FOR THESE TESTS ON SIMILAR TYPE, SIZE AND DESIGN OF MOTOR FROM INDEPENDENT LABORATORY ARE AVAILABLE, THESE TEST MAY NOT BE REPEATED.

4 BHEL RESERVES THE RIGHT TO PERFORM REPEAT TEST, IF REQUIRED.

5 AFTER PACKING AND PRIOR TO ISSUE MDCC, PHOTOGRAPHS OF ITEMS TO BE DESPATCHED SHALL BE SENT TO BHEL FOR REVIEW.

6 IN CASE , ANY CHANGES IN QP COMMENTED BY CUSTOMER AT CONTRACT STAGE SHALL BE CARRIED OUT BY BIDDER WITHOUT ANY IMPLICATION TO BHEL/ CUSTOMER.

LEGENDS:

*RECORDS, INDENTIFIED WITH "TICK"(√) SHALL BE ESSENTIALLY INCLUDED BY SUPPLIER IN QA DOCUMENTATION,
** **M**: SUPPLIER/ MANUFACTURER/ SUB-SUPPLIER, **B**: MAIN SUPPLIER/ BHEL/ THIRD PARTY INSPECTION AGENCY, **C**: CUSTOMER,
P: PERFORM, **W**: WITNESS, **V**: VERIFICATION, AS APPROPRIATE
MA: MAJOR, **MI**: MINOR, **CR**: CRITICAL
D: DOCUMENT

BHEL					
ENGINEERING			QUALITY		
	Sign & Date	Name		Sign & Date	Name
Prepared by:	2/3/2020	Hema K.	Checked by:	2/3/20	KUNAL GANDHI
Reviewed by:	02/3/2020	P. Dutta	Reviewed by:		

BIDDER/ SUPPLIER	
Sign & Date	
Seal	

FOR CUSTOMER REVIEW & APPROVAL			
Doc No:			
	Sign & Date	Name	Seal
Reviewed by:			
Approved by:			

बीएच ई एल BHEL	MANUFACTURER/ BIDDER/ SUPPLIER NAME & ADDRESS	STANDARD QUALITY PLAN	SPEC. NO :	DATE:27.02.2020
		CUSTOMER :	QP NO.: PED-506-00-Q-007, REV-04	
		PROJECT:	PO NO.:	
		ITEM: AC ELECT. MOTORS 55 KW & ABOVE (LV (415V)) SYSTEM:	SECTION: II	SHEET 1 OF 9

Sl No.	Component & Operations	Characteristics	Class	Type of Check	Quantum Of check		Reference Document	Acceptance NORMS	FORMAT OF RECORD		AGENCY			
1	2	3	4	5	6		7	8	9	-	--			
					M	C/N				D	M	C	N	
1.0	RAW MATERIAL & BOUGHT OUT CONTROL													
1.1	SHEET STEEL, PLATES, SECTION, EYEBOLTS	1.SURFACE CONDITION	MA	VISUAL	100%	-	-	FREE FROM BLINKS, CRACKS, WAVINESS ETC	LOG BOOK		P	-	-	
		2.DIMENSIONS	MA	MEASUREMENT	SAMPLE	-	MANUFACTURER'S DRG./SPEC	MANUFACTURER'S DRG./SPEC	-DO-		P	-	-	
		3.PROOF LOAD TEST (EYE BOLT)	MA	MECH. TEST	-DO-	-	-DO-	-DO-	TEST REPORT		P/V	-		
1.2	HARDWARES	1.SURFACE CONDITION	MA	VISUAL	100%	-		FREE FROM CRACKS, UN-EVENNESS ETC.	-DO-		P	-	-	
		2.PROPERTY CLASS	MA	VISUAL	SAMPLES	-	MANUFACTURER'S DRG./SPEC	MANUFACTURER'S DRG./SPEC	SUPPLIERS TC & LOG		P/V	-	-	PROPERTY CLASS MARKING SHALL BE CHECKED BY THE VENDOR
1.3	CASTING	1.SURFACE CONDITION	MA	VISUAL	100%	-		FREE FROM CRACKS, BLOW HOLES ETC.	LOG BOOK		P/V	-		
		2.CHEM. & PHY. PROP.	MA	CHEM & MECH TEST	1/HEAT NO.	-	MANUFACTURER'S DRG./SPEC	MANUFACTURER'S DRG./SPEC	SUPPLIER'S TC		P/V	-		HEAT NO. SHALL BE VERIFIED
		3.DIMENSIONS	MA	MEASUREMENT	100%	-	MANUFACTURER'S DRG.	MANUFACTURER'S DRG.	LOG BOOK		P/V	-		
1.4	PAINT & VARNISH	1.MAKE, SHADE, SHELF LIFE & TYPE	MA	VISUAL	100% CONTINUOUS	-	MANUFACTURER'S DRG./SPEC	MANUFACTURER'S DRG./SPEC	LOG BOOK		P/V	-		

BHEL					
ENGINEERING			QUALITY		
	Sign & Date	Name		Sign & Date	Name
Prepared by:	2/3/2020	Hema R.	Checked by:	2/3/20	Kunal Gaikwad
Reviewed by:	2/3/2020	P. Dutta	Reviewed by:		

BIDDER/ SUPPLIER	
Sign & Date	
Seal	

FOR CUSTOMER REVIEW & APPROVAL			
Doc No:			
	Sign & Date	Name	Seal
Reviewed by:			
Approved by:			

बीएचईएल BHEL	MANUFACTURER/ BIDDER/ SUPPLIER NAME & ADDRESS	STANDARD QUALITY PLAN	SPEC. NO :	DATE:27.02.2020
		CUSTOMER :	QP NO.: PED-506-00-Q-007, REV-04	
		PROJECT:	PO NO.:	
		ITEM: AC ELECT. MOTORS 55 KW & ABOVE (LV (415V)) SYSTEM:	SECTION: II	SHEET 2 OF 9

Sl No.	Component & Operations	Characteristics	Class	Type of Check	Quantum Of check		Reference Document	Acceptance NORMS	FORMAT OF RECORD		AGENCY			
1	2	3	4	5	6		7	8	9	*	**			
					M	C/N				D	M	C	N	
1.5	SHAFT (FORGED OR ROLLED)	1. SURFACE COND.	MA	VISUAL	100%	-	-	FREE FROM VISUAL DEFECTS	-DO-		P	-	-	VENDOR'S APPROVAL IDENTIFICATION SHALL BE MAINTAINED
		2. CHEM. & PHYSICAL PROPERTIES	MA	CHEM. & PHYSICAL TESTS	1/HEAT NO. OR HEAT TREATMENT BATCH NO	-	MANUFACTURER'S DRG./ SPEC.	MANUFACTURER'S DRG./ STD.	SUPPLIER'S TC		P/V	-		
		3. DIMENSIONS	MA	MEASUREMENT	100%	-	-DO-	MANUFACTURER'S DRG.	LOG BOOK		P/V	-		
		4.INTERNAL FLAWS	CR	ULTRASONIC TEST	100%	100%	ASTM-A388	MANUFACTURER'S STD.	-DO-	✓	P/W	V	-	FOR DIA OF 55 MM & ABOVE
1.6	SPACE HEATERS, CONNEC-TORS, TERMINAL BLOCKS, CABLES, CABLE LUGS, CARBON BRUSH TEMP. DETECTORS, RTD, BTD'S	1. MAKE & RATING	MA	VISUAL	-DO-	-	MANUFACTURER'S DRG./STD.	MANUFACTURER'S DRG./STD.	-DO-		P/V	-	-	
		2. PHYSICAL COND.	MA	-DO-	-DO-	-	-	NO PHYS. DAMAGE, NO ELECTRICAL DISCONTINUITY	-DO-		P/V	-	-	
		3.DIMENSIONS (WHEREVER APPLICABLE)	MA	MEASUREMENT	SAMPLE	-	MANUFACTURER'S DRG./ STD	MANUFACTURER'S DRG. / STD.	-DO-		P/V	-	-	
		4.PERFORMANCE/ CALIBRATION	MA	TEST	100%	-	-DO-	-DO-	TEST REPORT		P/V	-	-	

BHEL					
ENGINEERING			QUALITY		
	Sign & Date	Name		Sign & Date	Name
Prepared by:	27/3/2020	Hema K.	Checked by:	27/3/20	KUNAL GANDHI
Reviewed by:	27/3/2020	P. Dutta	Reviewed by:		

BIDDER/ SUPPLIER	
Sign & Date	
Seal	

FOR CUSTOMER REVIEW & APPROVAL			
Doc No:			
	Sign & Date	Name	Seal
Reviewed by:			
Approved by:			

बी एच ई एल BHEL	MANUFACTURER/ BIDDER/ SUPPLIER NAME & ADDRESS	STANDARD QUALITY PLAN		SPEC. NO :	DATE:27.02.2020
		CUSTOMER :		QP NO.: PED-506-00-Q-007, REV-04	
		PROJECT:		PO NO.:	
		ITEM: AC ELECT. MOTORS 55 KW & ABOVE (LV (415V))	SYSTEM:	SECTION: II	SHEET 3 OF 9

Sl No.	Component & Operations	Characteristics	Class	Type of Check	Quantum Of check		Reference Document	Acceptance NORMS	FORMAT OF RECORD		AGENCY			
1	2	3	4	5	6		7	8	9	*	**			
					M	C/N				D	M	C	N	
1.7	OTHER INSULATING MATERIALS LIKE SLEEVES, BINDINGS CORDS, PAPERS, PRESS BOARDS ETC.	1. SURFACE COND. ETC.	MA	VISUAL	100%	-	-	NO VISUAL DEFECTS	TEST REPORT		P/V	-	-	
		2. OTHER CHARACTERISTICS	MA	TEST	SAMPLE	-	MANUFACTURER'S STD.	MANUFACTURER'S STD.	LOG BOOK AND OR SUPPLIER'S TC		P/V	-	-	
1.8	SHEET STAMPING (PUNCHED)	1. SURFACE COND.	MA	VISUAL	100%	-	-	NO VISUAL DEFECTS (FREE FROM BURS)	LOG BOOK		P	-	-	
		2.DIMENSIONS INCLUDING BURS HEIGHT	MA	MEASUREMENT	SAMPLE	-	MANUFACTURER'S DRG.	MANUFACTURER'S DRG.	-DO-		P/V	-	-	
		3. ACCEPTANCE TESTS	MA	ELECT. & MECH TESTS	-DO-	-	MANUFACTURER'S DRG./ STD.	MANUFACTURER'S DRG./ STD.	SUPPLIER'S TC		P/V	-	-	
1.9	CONDUCTORS	1. SURFACE FINISH	MA	VISUAL	100%	-	-	FREE FROM VISUAL DEFECTS	LOG BOOK		*P/V	-	-	* MOTOR MANUFACTURER TO CONDUCT VISUAL CHECK FOR SURFACE FINISH ON RANDOM BASIS (10% SAMPLE) AT HIS WORKS AND MAINTAIN RECORD FOR VERIFICATION BY BHEL/CUSTOMER.
		2.ELECT. PROP. & MECH. PROP	MA	ELECT. & MECH TEST	SAMPLES	-	MANUFACTURER'S DRG./ SPEC.	MANUFACTURER'S / SPEC.	SUPPLIERS TC & VENDOR'S TEST REPORTS		P/V	-	-	

BHEL					
ENGINEERING			QUALITY		
	Sign & Date	Name		Sign & Date	Name
Prepared by:	27/3/2020	Hema K.	Checked by:	2/3/20	KUNAL GANDHI
Reviewed by:	02/3/2020	P. Dutta	Reviewed by:		

BIDDER/ SUPPLIER	
Sign & Date	
Seal	

FOR CUSTOMER REVIEW & APPROVAL			
Doc No:			
	Sign & Date	Name	Seal
Reviewed by:			
Approved by:			

बीएचईएल BHEL	MANUFACTURER/ BIDDER/ SUPPLIER NAME & ADDRESS	STANDARD QUALITY PLAN	SPEC. NO :	DATE:27.02.2020
		CUSTOMER :	QP NO.: PED-506-00-Q-007, REV-04	
		PROJECT:	PO NO.:	
		ITEM: AC ELECT. MOTORS 55 KW & ABOVE (LV (415V)) / SYSTEM:	SECTION: II	SHEET 4 OF 9

Sl No.	Component & Operations	Characteristics	Class	Type of Check	Quantum Of check		Reference Document	Acceptance NORMS	FORMAT OF RECORD		AGENCY			
1	2	3	4	5	6		7	8	9	*	**			
					M	C/N				D	M	C	N	
		3.DIMENSIONS	MA	MEASUREMENT	-DO-	-	-DO-	-DO-	Log Book		P/V	-	-	
1.10	BEARINGS	1.MAKE & TYPE	MA	VISUAL	100%	-	MANUFACTURER'S DRG./ APPROVED DATASHEET	MANUFACTURER'S DRG./ APPROVED DATASHEET	-DO-		P/V	-	-	
		2.DIMENSIONS	MA	MEASUREMENT	SAMPLE	-	APPROVED DATASHEET	APPROVED DATASHEET/ BEARING MANUF'S CATALOGUES	-DO-		P/V	-	-	
		3.SURFACE FINISH	MA	VISUAL	100%	-	-	FREE FROM VISUAL DEFECTS	-DO-		P/V	-	-	
1.11	SLIP RING (WHEREVER APPLICABLE)	1.SURFACE COND.	MA	VISUAL	100%	-	-	-DO-	-DO-		P	-	-	
		2.DIMENSIONS	MA	MEASUREMENT	SAMPLE	-	MANUFACTURER'S DRG	MANUFACTURER'S DRG	-DO-		P	-	-	
		3.TEMP.WITH-STAND CAPACITY	MA	ELECT.TEST	-DO-	-	MANUFACTURER'S STD./ APPROVED DATASHEET	MANUFACTURER'S STD./ APPROVED DATASHEET	-DO-		P/V	-	-	
		4.HV/IR	MA	-DO-	100%	-	-DO-	-DO-	-DO-		P/V	-	-	
1.12	OIL SEALS & GASKETS	1.MATERIAL OF GASKET	MA	VISUAL	100%	-	MANUFACTURER'S DRG/SPECS	MANUFACTURER'S DRG./ SPECS.	-DO-		P	-	-	
		2.SURFACE COND.	MA	VISUAL	100%	-	-	FREE FROM VISUAL DEFECTS	-DO-		P	-	-	
		3.DIMENSIONS	MA	MEASUREMENT	SAMPLE	-	MANUFACTURER'S DRG	MANUFACTURER'S DRG	-DO-		P	-	-	

BHEL					
ENGINEERING			QUALITY		
	Sign & Date	Name		Sign & Date	Name
Prepared by:	2/3/2020	Hema K.	Checked by:		KUNAL GANDHI
Reviewed by:	02/3/2020	P. Dutta	Reviewed by:		

BIDDER/ SUPPLIER	
Sign & Date	
Seal	

FOR CUSTOMER REVIEW & APPROVAL			
Doc No:			
	Sign & Date	Name	Seal
Reviewed by:			
Approved by:			

बीएचईएल BHEL	MANUFACTURER/ BIDDER/ SUPPLIER NAME & ADDRESS	STANDARD QUALITY PLAN		SPEC. NO :	DATE:27.02.2020
		CUSTOMER :		QP NO.: PED-506-00-Q-007, REV-04	
		PROJECT:		PO NO.:	
		ITEM: AC ELECT. MOTORS 55 KW & ABOVE (LV (415V))	SYSTEM:	SECTION: II	SHEET 5 OF 9

Sl No.	Component & Operations	Characteristics	Class	Type of Check	Quantum Of check		Reference Document	Acceptance NORMS	FORMAT OF RECORD		AGENCY			
1	2	3	4	5	6		7	8	9	*	**			
					M	C/N				D	M	C	N	
2.0	IN PROCESS													
2.1	STATOR FRAME WELDING (IN CASE OF FABRICATED STATOR)	1.WORKMANSHIP & CLEANNESS	MA	VISUAL	100%	-	-DO-	GOOD FINISH	LOG BOOK		P/W	-	-	
		2.DIMENSIONS	MA	MEASUREMENT	-DO-	-	MANUFACTURER'S DRG	MANUFACTURER'S DRG	-DO-		P	-	-	
2.2	MACHINING	1.FINISH	MA	VISUAL	100%	-	-DO-	GOOD FINISH	LOG BOOK		P	-	-	
		2.DIMENSIONS	MA	MEASUREMENT	-DO-	-	MANUFACTURER'S DRG	MANUFACTURER'S DRG	-DO-		P	-	-	
		3.SHAFT SURFACE FLOWS	MA	PT	100%	100%	MANUFACTURER'S STD./ ASTM-E165	MANUFACTURER'S STD./ APPROVED DATASHEET.	-DO-	✓	P	V	-	
2.3	PAINTING	1.SURFACE PREPARATION	MA	VISUAL	100%	-	MANUFACTURER'S STD./APPROVED DATASHEET	SAME AS COL.7	LOG BOOK		P	-	-	
		2.PAINT THICKNESS (BOTH PRIMER & FINISH COAT)	MA	MEASUREMENT BY ELCOMETER	SAMPLE	-	-DO-	-DO-	-DO-		P	-	-	
		3.SHADE	MA	VISUAL	-DO-	-	-DO-	-DO-	LOG BOOK		P	-	-	
		4.ADHESION	MA	CROSS CUTTING & TAPE TEST	-DO-	-	-DO-	-DO-	LOG BOOK		P	-	-	

BHEL					
ENGINEERING			QUALITY		
	Sign & Date	Name		Sign & Date	Name
Prepared by:	27/3/2020	Hema R	Checked by:	27/3/20	KUNAL GANDHI
Reviewed by:	02/3/2020	P. Dutta	Reviewed by:		

BIDDER/ SUPPLIER	
Sign & Date	
Seal	

FOR CUSTOMER REVIEW & APPROVAL			
Doc No:			
	Sign & Date	Name	Seal
Reviewed by:			
Approved by:			

बीएचईएल BHEL	MANUFACTURER/ BIDDER/ SUPPLIER NAME & ADDRESS	STANDARD QUALITY PLAN		SPEC. NO :	DATE:27.02.2020
		CUSTOMER :		QP NO.: PED-506-00-Q-007, REV-04	
		PROJECT:		PO NO.:	
		ITEM: AC ELECT. MOTORS 55 KW & ABOVE (LV (415V))	SYSTEM:	SECTION: II	SHEET 6 OF 9

Sl No.	Component & Operations	Characteristics	Class	Type of Check	Quantum Of check		Reference Document	Acceptance NORMS	FORMAT OF RECORD		AGENCY			
1	2	3	4	5	6		7	8	9					
					M	C/N				D	M	C	N	
2.4	SHEET STACKING	1.COMPLETENESS	MA	MEASUREMENT	SAMPLE	-	MANUFACTURER'S STD.	MANUFACTURER'S STD.	LOG BOOK		P	-	-	
		2.COMPRESSION & TIGHTENING	MA	MEASUREMENT	100%	-	-DO-	-DO-	LOG BOOK		P	-	-	
2.5	WINDING	1.COMPLETENESS	CR	VISUAL	100%	-	MANUFACTURER'S STD./APPROVED DATASHEET	MANUFACTURER'S STD./APPROVED DATASHEET	LOG BOOK		P	-	-	
		2.CLEANLINESS	CR	-DO-	-DO-	-	-DO-	-DO-	LOG BOOK		P	-	-	
		3.IR-HV-IR	CR	ELECT. TEST	100%	100%	IS-325//IS-12615/IEC-60034 PART-1	IS-325//IS-12615/IEC-60034 PART-1	LOG BOOK	✓	P	V	-	
		4.RESISTANCE	CR	-DO-	100%	100%	IS-325//IS-12615/IEC-60034 PART-1	IS-325//IS-12615/IEC-60034 PART-1	LOG BOOK	✓	P	V	-	
		5.INTERTURN INSULATION	CR	-DO-	-DO-	-	-DO-	-DO-	LOG BOOK		P	-	-	
2.6	IMPREGNATION	1.VISCOSCITY	MA	PHY. TEST	AT STARTING	-	MANUFACTURER'S STANDARD	MANUFR'S STANDARD	LOG BOOK		P	-	-	
		2.TEMP. PRESSURE VACCUM	MA	PROCESS CHECK	CONTINUOUS	-	MANUFACTURER'S STANDARD	MANUFACTURER'S STANDARD	LOG BOOK		P	-	-	
		3.NO. OF DIPS	MA	-DO-	CONTINUOUS	CONTINUOUS	MANUFACTURER'S STANDARD	MANUFACTURER'S STANDARD	LOG BOOK	✓	P	V	-	THREE DIPS TO BE GIVEN

BHEL					
ENGINEERING			QUALITY		
	Sign & Date	Name		Sign & Date	Name
Prepared by:	2/3/2020	Hema K.	Checked by:	2/3/20	KUNAL GANDHI
Reviewed by:	02/3/2020	P.Dutta	Reviewed by:		

BIDDER/ SUPPLIER	
Sign & Date	
Seal	

FOR CUSTOMER REVIEW & APPROVAL			
Doc No:			
	Sign & Date	Name	Seal
Reviewed by:			
Approved by:			

बी एच ई एल BHEL	MANUFACTURER/ BIDDER/ SUPPLIER NAME & ADDRESS	STANDARD QUALITY PLAN		SPEC. NO :	DATE:27.02.2020
		CUSTOMER :		QP NO.: PED-506-00-Q-007, REV-04	
		PROJECT:		PO NO.:	
		ITEM: AC ELECT. MOTORS 55 KW & ABOVE (LV (415V))	SYSTEM:	SECTION: II	SHEET 7 OF 9

Sl No.	Component & Operations	Characteristics	Class	Type of Check	Quantum Of check		Reference Document	Acceptance NORMS	FORMAT OF RECORD		AGENCY			
1	2	3	4	5	6		7	8	9	-	--			
					M	C/N				D	M	C	N	
		4.DURATION	MA	-DO-	CONTINUOUS	CONTINUOUS	-DO-	-DO-	LOG BOOK	✓	P	V	-	
2.7	COMPLETE STATOR ASSEMBLY	1.COMPACTNESS & CLEANLINESS	MA	VISUAL	100%	-	-DO-	-DO-	LOG BOOK		P	-	-	
2.8	BRAZING/COMPRESSION JOINT	1.COMPLETENESS	CR	-DO-	-DO-	-	-DO-	-DO-	LOG BOOK		P	-	-	
		2.SOUNDNESS	CR	MALLET TEST & UT	100%	100%	-DO-	-DO-	LOG BOOK	✓	P	V	-	
		3.HV	MA	ELECT. TEST	100%	100%	-DO-	-DO-	LOG BOOK	✓	P	V	-	
2.9	COMPLETE ROTOR ASSEMBLY	1.RESIDUAL UNBALANCE	CR	DYN. BALANCE	-DO-	-	MANUFACTURER'S SPEC./ ISO 1940	MANUFACTURER'S DWG.	LOG BOOK		P	-	-	
		2.SOUNDNESS OF DIE CASTING	CR	ELECT. (GROWLER TEST)	100%	100%	MANUFACTURER'S SPEC.	MANUFACTURER'S SPEC.	LOG BOOK	✓	P	V	-	
2.10	ASSEMBLY	1.ALIGNMENT	MA	MEAS.	-DO-	-	-DO-	-DO-	LOG BOOK		P	-	-	
		2.WORKMANSHIP	MA	VISUAL	-DO-	-	-DO-	-DO-	LOG BOOK		P	-	-	
		3.AXIAL PLAY	MA	MEAS.	100%	100%	-DO-	-DO-	LOG BOOK	✓	P	V	-	
		4.DIMENSIONS	MA	-DO-	-DO-	-	MANUFACTURER'S DRG./ MANUFACTURER'S SPEC.	MANUFACTURER'S DRG/ RELEVANT IS	LOG BOOK		P	-	-	
		5.CORRECTNESS, COMPLETENESS TERMINATIONS/ MARKING/ COLOUR CODE	MA	VISUAL	100%	-	MANUFACTURER'S SPEC.	MANUFACTURER'S SPEC.	LOG BOOK		P	-	-	
		6. RTD, BTD & SPACE HEATER MOUNTING.	MA	VISUAL	100%	100%	MANUFACTURER'S SPEC.	MANUFACTURER'S SPEC.	LOG BOOK	✓	P	V	-	

BHEL					
ENGINEERING			QUALITY		
	Sign & Date	Name		Sign & Date	Name
Prepared by:	2/3/2020	Hema K.	Checked by:	2/3/20	KUNAL GANDHI
Reviewed by:	02/3/2020	P. Dutta	Reviewed by:		

BIDDER/ SUPPLIER	
Sign & Date	
Seal	

FOR CUSTOMER REVIEW & APPROVAL			
Doc No:			
	Sign & Date	Name	Seal
Reviewed by:			
Approved by:			

बीएचईएल BHEL	MANUFACTURER/ BIDDER/ SUPPLIER NAME & ADDRESS	STANDARD QUALITY PLAN	SPEC. NO :	DATE:27.02.2020
		CUSTOMER :	QP NO.: PED-506-00-Q-007, REV-04	
		PROJECT:	PO NO.:	
		ITEM: AC ELECT. MOTORS 55 KW & ABOVE (LV (415V)) / SYSTEM:	SECTION: II	SHEET 8 OF 9

Sl No.	Component & Operations	Characteristics	Class	Type of Check	Quantum Of check		Reference Document	Acceptance NORMS	FORMAT OF RECORD		AGENCY			
1	2	3	4	5	6		7	8	9	*	**			
					M	C/N				D	M	C	N	
3.0	TESTS	1.TYPE TESTS INCLUDING SPECIAL TESTS	MA	ELECT.TEST	1/TYPE/SIZE	1/TYPE/SIZE	IS-325//IS-12615/APPROVED DATASHEET	IS-325/IS-12615/APPROVED DATASHEET	TEST REPORT		P	W*	W*	* NOTE - 1
		2.ROUTINE TESTS INCLUDING SPECIAL TEST	MA	-DO-	100%	100%	-DO-	-DO-	-DO-		P	V /W$	V /W$	$ NOTE - 2
		3.VIBRATION & NOISE LEVEL	MA	-DO-	100%	100%	IS: 12075 / IEC 60034-14 & IS-12065	IS: 12075 / IEC 60034-14 & IS-12065	-DO-		P	V /W$	V /W$	$ NOTE - 2
		4.OVERALL DIMENSIONS AND ORIENTATION	MA	MEASUREMENT & VISUAL	100%	100%	APPROVED DRG/DATA SHEET	APPROVED DRG/DATA SHEET &	TEST/INSPC. REPORT		P	W	-	
		5.DEGREE OF PROTECTION	MA	ELECT. & MECH. TEST	1/TYPE/ SIZE	1/TYPE/ SIZE	IEC 60034-5/IS-12615	APPROVED DATASHEET	TC	✓	P	V	V	TC FROM AN INDEPENDENT LABORATORY, REFER NOTE-3
		6. MEASUREMENT OF RESISTANCE OF RTD & BTD	MA	-DO-	100%	100%	IS-325//IS-12615/IEC-60034 PART-1/IS: 12802	IS-325/IS-12615/IEC-60034 PART-1/IS: 12802	-DO-		P	V /W$	V /W$	$ NOTE - 2
		7. MEASUREMENT OF RESISTANCE, IR OF SPACE HEATER	MA	-DO-	100%	100%	IS-325//IS-12615/IEC-60034 PART-1	IS-325/IS-12615/IEC-60034 PART-1	-DO-		P	V /W$	V /W$	$ NOTE - 2
		8. NAME PLATE DETAILS	MA	VISUAL	100%	100%	IS-325//IS-12615& DATA SHEET	IS-325//IS-12615 & DATA SHEET	TEST/INSPC. REPORT		P	V /W$	V /W$	$ NOTE - 2
		9.EXPLOSION FLAME PROOF NESS (IF SPECIFIED)	MA	EXPLOSION FLAME PROOF TEST	1/TYPE	1/TYPE	IS 2148 / IEC 60079-1	IS 2148 / IEC 60079-1	TC	✓	P	V	V	TC FROM AN INDEPENDENT LABORATORY, REFER NOTE-3
		10. PAINT SHADE, THICKNESS & FINISH	MA	VISUAL & MEASUREMENT BY ELKOMETER	SAMPLE	SAMPLE	APPROVED DATASHEET	APPROVED DATASHEET	TC		P	W$	W$	SAMPLING PLAN TO BE DECIDED BY INSPECTION AGENCY $ NOTE - 2

BHEL					
ENGINEERING			QUALITY		
	Sign & Date	Name		Sign & Date	Name
Prepared by:	3/2/2020	Hema K	Checked by:	3/2/20	KUNAL GANDHI
Reviewed by:	03/2/2020	P. Dutt	Reviewed by:		

BIDDER/ SUPPLIER	
Sign & Date	
Seal	

FOR CUSTOMER REVIEW & APPROVAL			
Doc No:			
	Sign & Date	Name	Seal
Reviewed by:			
Approved by:			

बीएच ईएल BHEL	MANUFACTURER/ BIDDER/ SUPPLIER NAME & ADDRESS	STANDARD QUALITY PLAN	SPEC. NO :	DATE:27.02.2020
		CUSTOMER :	QP NO.: PED-506-00-Q-007, REV-04	
		PROJECT:	PO NO.:	
		ITEM: AC ELECT. MOTORS 55 KW & ABOVE (LV (415V)) / SYSTEM:	SECTION: II	SHEET 9 OF 9

Sl No.	Component & Operations	Characteristics	Class	Type of Check	Quantum Of check		Reference Document	Acceptance NORMS	FORMAT OF RECORD		AGENCY			
1	2	3	4	5	6		7	8	9	*	**			
					M	C/N				D	M	C	N	
4.0	PACKING	SURFACE FINISH & COMPLETENESS	MA	VISUAL	100%	100%	AS PER MANUFACT. STANDARD / APPROVED CROSS SECTION DRAWING.	AS PER MANUFACT. STANDARD / APPROVED CROSS SECTION DRAWING.	INSPC. REPORT		P	W	-	IF APPLICABLE, REFER SEAWORTHY PACKING ALSO.

NOTES:

1 DEPENDING UPON THE SIZE AND CRITICALLY, WITNESSING BY BHEL SHALL BE DECIDED.

2 ROUTINE TESTS ON 100% MOTORS SHALL BE DONE BY THE VENDOR. HOWEVER, BHEL/CUSTOMER SHALL WITNESS ROUTINE TESTS ON RANDOM SAMPLES. THE SAMPLING PLAN SHALL BE MUTUALLY AGREED UPON.

3 IN CASE TEST CERTIFICATES FOR THESE TESTS ON SIMILAR TYPE, SIZE AND DESIGN OF MOTOR FROM INDEPENDENT LABORATORY ARE AVAILABLE, THESE TEST MAY NOT BE REPEATED.

4 BHEL RESERVES THE RIGHT TO PERFORM REPEAT TEST, IF REQUIRED.

5 AFTER PACKING AND PRIOR TO ISSUE MDCC, PHOTOGRAPHS OF ITEMS TO BE DESPATCHED SHALL BE SENT TO BHEL PURCHASE GROUP FOR REVIEW.

6 IN CASE , ANY CHANGES IN QP COMMENTED BY CUSTOMER AT CONTRACT STAGE SHALL BE CARRIED OUT BY BIDDER WITHOUT ANY IMPLICATION TO BHEL/ CUSTOMER.

LEGENDS:

*RECORDS, INDENTIFIED WITH "TICK"(√) SHALL BE ESSENTIALLY INCLUDED BY SUPPLIER IN QA DOCUMENTATION,

** M: SUPPLIER/ MANUFACTURER/ SUB-SUPPLIER, B: MAIN SUPPLIER/ BHEL/ THIRD PARTY INSPECTION AGENCY, C: CUSTOMER,

P: PERFORM. W: WITNESS. V: VERIFICATION. AS APPROPRIATE

MA: MAJOR, MI: MINOR, CR: CRITICAL

D: DOCUMENT

BHEL					
ENGINEERING			QUALITY		
	Sign & Date	Name		Sign & Date	Name
Prepared by:	2/3/2020	Hema K.	Checked by:	2/3/20	KUNAL GANDHI
Reviewed by:	02/3/2020	P. Dutta	Reviewed by:		

BIDDER/ SUPPLIER	
Sign & Date	
Seal	

FOR CUSTOMER REVIEW & APPROVAL			
Doc No:			
	Sign & Date	Name	Seal
Reviewed by:			
Approved by:			

CLAUSE NO.

QUALITY ASSURANCE

NTPC

MOTOR

TESTS/CHECKS / TEMS/COMPONENTS	Visual	Dimensional	Make/Type/Rating /General Physical Inspection	Mech/Chem. Properties	NDT /DP/MPI/UT	Metallography	Electrical Characteristics	Welding/Brazing(WPS/PQR)	Heat Treatment	Magnetic Characteristics	Hydraulic/Leak/Pressure Test	Thermal Characteristics	Run out	Dynamic Balancing	Routine & Acceptance tests as per IS-325/IS-4722 /IS- 9283/IS 2148/IEC60034/IEC 60079-I/ IS-12615	Vibration	Over speed	Tan delta, shaft voltage & polarization index test	Paint shade, thickness & adhesion
Plates for stator frame, end shield, spider etc.	Y	Y	Y	Y	Y				Y										
Shaft	Y	Y	Y	Y	Y	Y			Y										
Magnetic Material	Y	Y	Y	Y			Y			Y		Y							
Rotor Copper/Aluminium	Y	Y	Y	Y			Y		Y										
Stator copper	Y	Y	Y	Y			Y		Y			Y							
SC Ring	Y	Y	Y	Y	Y		Y	Y	Y										
Insulating Material	Y		Y	Y			Y					Y							
Tubes, for Cooler	Y	Y	Y	Y	Y				Y		Y								
Sleeve Bearing	Y	Y	Y	Y	Y				Y		Y								
Stator/Rotor, Exciter Coils	Y	Y	Y				Y	Y											
Castings, stator frame, terminal box and bearing housing etc.	Y	Y	Y	Y	Y			Y											
Fabrication & machining of stator, rotor, terminal box	Y	Y			Y			Y	Y										

Wound stator	Y	Y					Y	Y											
Wound Exciter	Y	Y					Y	Y											
Rotor complete	Y	Y					Y						Y	Y					
Exciter, Stator, Rotor, Terminal Box assembly	Y	Y					Y												
Accessories, RTD, BTD,CT, Space heater, antifriction bearing, gaskets etc.	Y	Y	Y																
Complete Motor	Y	Y	Y												Y	Y	Y	Y1	Y

Note: 1. This is an indicative list of tests/checks. The manufacture is to furnish a detailed Quality Plan indicating the practices & Procedure followed along with relevant supporting documents during QP finalization. However, No QP for LT motor upto 50KW.

2. Additional routine tests for Flame proof motors shall be applicable as per relevant standard
3. Makes of major bought out items for HT motors will be subject to NTPC approval.
4. Y1 = for HT Motor / Machines only.

ANNEXURE-I

1.0	Design ambient temperature	:	50 °C
2.0	Maximum acceptable kW rating of LV motor	:	200KW *
3.0	Installation (Indoors/ Outdoors)	:	As required
4.0	Details of supply system		
	a) Rated voltage (with variation)	:	415V ± 10%
	b) Rated frequency (with variation)	:	50 Hz + 3 % to - 5%
	c) Combined voltage & freq. variation	:	10% (sum of absolute values)
	d) System fault level at rated voltage	:	50 kA for 1 sec
	e) Short time rating for terminal boxes		
	o 110 kW and above (Breaker Controlled)	:	50 KA for 0.25 sec.
	o Below 110 kW (Contactor Controlled)	:	50 KA protected by HRC fuse
	f) LV System grounding	:	Solidly
5.0	Winding & Insulation	:	Class F with temp rise limited to class B
6.0	Minimum voltage for starting (As percentage of rated voltage)	:	85% for motor ratings below 110kW 80% for motor ratings from 110kW to 200kW.
7.0	Power cables data	:	Shall be given during detailed engg.
8.0	Earth Conductor Size & Material	:	Shall be given during detailed engg.
9.0	Space heater supply (for motors >=30kw)	:	240 V, 1ϕ, 50 Hz
10.0	Rating up to which Single phase motor	:	Acceptable below 0.2 kW
11.0	Locked rotor current		
	a) Limit as percentage of FLC	:	As per IS 12615
12.0	Makes	:	BHEL/ Customer approval (Package owner to take care)
13.0	Paint shade	:	Blue (RAL 5012) – Corrosion proof
14.0	Degree Of protection for motor/ terminal box	:	Degree of protection for various enclosures as per IEC60034-05 shall be as follows:-

i) Indoor motors - IP 54
ii) Outdoor motors - IP 55
iii) Cable box-indoor area - IP 54
iv) Cable Box-Outdoor area - IP 55

*** LT motors of continuous duty shall be energy efficient IE3 class conforming to IS-12615**

15.0 TESTING REQUIREMENTS: IN LINE WITH SPECIFICATION

DATA SHEET-C

CLAUSE NO.	Bidder's Name ……..

DE-1B	**LT MOTORS**	
A.	**GENERAL**	
5.	Manufacturer & Country of origin. (Shall be as per approved QA make)	
6.	Equipment driven by motor	
7.	Motor type	
8.	Quantity	
B.	**DESIGN AND PERFORMANCE DATA**	
18.	Frame size	
19.	Type of duty	
20.	Type of enclosure /Method of cooling/ Degree of	
21.	Applicable standard to which motor generally	
22.	Efficiency class as per IS 12615	
23.	(a)Whether motor is flame proof	Yes/No
	(b)If yes, the gas group to which it conforms as per IS:2148	
24.	Type of mounting	
25.	Direction of rotation as viewed from DE END	
26.	Standard continuous rating at 40 deg.C. ambient temp. as per Indian Standard (KW)	
27.	Derated rating for specified normal condition i.e. 50 deg. C ambient temperature (KW)	
28.	Maximum continuous load demand of driven	
29.	Rated Voltage (volts)	
30.	Permissible variation of :	
	a. Voltage (Volts)	
	b. Frequency (Hz)	
	c. Combined voltage and frequency	
31.	Rated speed at rated voltage and	
32.	At rated Voltage and frequency:	
	a. Full load current	

CLAUSE NO.	Bidder's Name ……..

	b. No load current	
33.	Power Factor at	
	a. 100% load	
	b. NO load	
	c. Starting.	
34.	Efficiency at rated voltage and frequrecy,	
	a.100% load	
	b. 75% load	
	c. 50% load	
35.	Starting current (amps) at	
	a. 100 % voltage	
	b. 85% voltage	
	c. 80% voltage	
36.	Minimum permissible starting Voltage (Volts)	
37.	Starting time with minimum permissible voltage	
	a. Without driven equipment coupled	
	b. With driven equipment coupled	
38.	Safe stall time with 100% and 110% of rated	
	a. From hot condition	
	b. From cold condition	
39.	Torques :	
	a. Starting torque at min. permissible voltage(kg-	
	b. Pull up torque at rated voltage.	
	c. Pull out torque	
	d. Min accelerating torque (kg.m) available	
	e.Rated torque (kg.m)	
40.	Stator winding resistance per phase (ohms at 20	
41.	GD2 value of motors	

CLAUSE NO.	Bidder's Name ……..

42.	No of permissible successive starts when motor is in hot condition	
43.	Locked Rotor KVA Input	
44.	Locked Rotor KVA/KW	
45.	Vibration limit :Velocity (mm/s)	
46.	Noise level limit (dBA)	
C.	**CONSTRUCTIONAL FEATURES**	
1.	Stator winding insulation	
	a. Class & Type	
	b. Winding Insulation Process	
	c. Tropicalised (Yes/No)	
	d. Temperature rise over specified maximum ambient temperature of 50 deg C	
	e. Method of temperature measurement	
	f. Stator winding connection	
2.	Main Terminal Box	
	a. Type	
	b. Location(viewed from NDE side)	
	c. Entry of cables(bottom/side)	
	d. Recommended cable size(To be matched with cable size envisaged by owner)	
	e. Fault level (MVA),Fault level duration(sec)	
	f. Cable glands & lugs details (shall be suitable for	
3.	Type of DE/NDE Bearing	
4.	Motor Paint shade	
5.	Weight of	
	a. Motor stator (KG)	
	b. Motor Rotor (KG)	
	c. Total weight (KG)	

CLAUSE NO.	Bidder's Name ……..

D.	**List of accessories.**	
1.	3 Space Heaters (Applicable for 30 KW & above motor) (Nos./Power in watts/supply voltage)	
2.	Terminal Box for Space Heater (Yes/No)	
3.	Speed switch (Yes/No)	
4.	Insulation of bearing (Yes/No)	
5.	Noise reducer(Yes/No)	
6.	Grounding pads	
	i) No and size on motor body	
	ii) Nos on terminal Box	
7.	Vibration pads	
	i) Nos and size	
	ii) Location	
8.	Any other fitments	
E.	**List of curves.**	
1.	Torque speed characteristic of the motor	
2.	Thermal withstand characteristic	
3.	Starting. current Vs. Time	
4.	Starting. current Vs speed	
5.	P.F. and Effi. Vs Load	
F.	**Additional Data to be filled for each rating of DC Motor**	
1.	Rated armature voltage (Volt)	
2.	Rated field excitation (Amp)	
3.	Permissible % variation in voltage	
4.	Minimum Permissible Starting voltage (volt)	
5.	At rated voltage	
	i)Full load Armature current.(Amp)	

CLAUSE NO.	Bidder's Name ……..

	ii)Full load Field current (Amp)	
	iii)No load Armature current (Amp)	
6.	Full load Field current (Amp)	
7.	No load Aramature current (Amp)	
8.	Minimum permissible field current(Amp) to avoid	
	i) Maximum permissible voltage	
	ii) Rated voltage	
	iii) Minimum Permissible Voltage	
9.	Resistance (indicative Values) in ohm	
	i)Armature winding(Arm + IP + Series) at 25	
	ii) Field Winding at 25 deg. C	
10..	Inductance (indicative values)	
	i) Armature winding	
	ii) Field winding	
11	Value of trimmer resistance (ohm) to be connected in series with the shunt field to	
	i) 220 V DC	
	ii) 250 V DC	
	iii) 187 V DC	
12	Value of the external resistance (ohm)required to be connected in series with armature during starting only	
13	Technical data sheet for external resistance box	
14	GA drawing of motor	
15	Starting time calculation	
16	Starter resistance design calculation	
17	Electrical connection diagram of motor	

LOAD TITLE	RATING (KW / A)		UNIT (U)/STN (S)	Nos.		VOLTAGE CODE*	FEEDER CODE**	EMER. LOAD (Y)	CONT.(C)/ INTT.(I)	STARTING TIME >5 SEC (Y)	LOCATION	BOARD NO.	CABLE		BLOCK CABLE DRG. No.	CONTROL CODE	REMARKS	LOAD No.	VERIFICATION FROM MOTOR DATASHEET (Y/N)	KKS NO
	NAME PLATE	MAX. CONT. DEMAND (MCR)		RUNNING	STANDBY								SIZE CODE	NOs						
1	2	3	4	5	6	7	8	9	10	11	12	13	14	15	16	17	18	19	20	21

ANNEXURE-II

NOTES:
1. COLUMN 1 TO 12 & 18 SHALL BE FILLED BY THE REQUISITIONER (ORIGINATING AGENCY); REMAINING COLUMNS ARE TO BE FILLED UP BY PEM (ELECTRICAL)/ CUSTOMER
2. ABBREVIATIONS : * VOLTAGE CODE (7):- (ac) A=11 KV, B=6.6 KV, C=3.3 KV, D=415 V, E=240 V (1 PH), F=110 V (cc): G=220 V, H=110 V, J=48 V, K=+24V, L=-24 V
: ** FEEDER CODE (8):- U=UNIDIRECTIONAL STARTER, B=BI-DIRECTIONAL STARTER, S=SUPPLY FEEDER, D=SUPPLY FEEDER (CONTACTER CONTROLLED)

LOAD DATA (ELECTRICAL)	JOB NO.		ORIGINATING AGENCY		PEM (ELECTRICAL)	
	PROJECT TITLE	2X250 MW NSPCL BHILAI	NAME		DATA FILLED UP ON	
	SYSTEM	AGITATOR	SIGN.		DATA ENTERED ON	
	DEPTT. / SECTION	MAX	SHEET 1 OF 1	REV. 00	DE'S SIGN. & DATE	

CABLE SCHEDULE FORMAT

ANNEXURE III

UNITCABLENO	FROM	TO	PURPOSE	CABLE SCOPE (BHEL PEM/ VENDOR)	REMARKS	CABLESIZE	PATHCABLENO	TENTATIVE CABLE LENGTH

SECTION-I,
SUB-SECTION-D

LIST OF MAKES OF SUB-VENDOR ITEMS

	2 X 250 MW NSPCL BHILAI TPP - FGD TECHNICAL SPECIFICATION FOR AGITATORS	SPECIFICATION No: PE-TS-468-571-18000-A002	
		SECTION-I, Sub Section-D	
		REV. 00	Date: SEP. 2020
		SHEET : 1 OF 1	

Sl.no.	Item	Category of Inspection	Sub-vendor	Place	Remarks
1.	PAINT	III	ASIAN PAINT		
		III	BERGER		
		III	KANSAI NEROLAC		
		III	JOTUN		
		III	SHALIMAR		
		III	JENSON & NICHOLSON (I) LTD		
		III	CDC CARBOLINE (I) LTD.		
		III	ADDISON PAINTS LTD		
		III	GRAND POLYCOAT		

NOTES: INSPECTION CATEGORIZATION

CAT I: INSPECTION BY OWNER, BHEL/BHEL NOMINATED TPIA & VENDOR. MDCC WILL BE ISSUED BASED ON INSPECTION REPORT IN LINE ITH APPROVED QAP.

CAT II: INSPECTION BY BHEL/BHEL NOMINATED TPIA & VENDOR. MDCC WILL BE ISSUED BASED ON INSPECTION REPORT IN LINE ITH APPROVED QAP.

CAT III: MDCC WILL BE ISSUSED BASED COC & MTC ISSUSD BY VENDOR AND VERIFICATION BY BHEL / OWNER IN LINE WITH APPROVED QAP/CHECK LIST

Vendor to refer to this list for items in their scope only(as indicated in Electrical scope sheet between BHEL & Vendor)

एनटीपीसी NTPC		LIST OF ITEMS REQUIRING QP APPROVAL & ACCEPTABLE VENDOR ; CONTRACTOR-M/S BHEL	REVISION NO. 00 DATE 20th April 2017

Sl. No.	ITEM	QP / INS CAT.	QP No:- 9585-001-QVE-	QP SUB. SCH.	QP APPL SCHE DULE	SUB-SUPPLIERS	PLACE	SUB-SUPPLIER APPL. STATUS AS PER NTPC	SC APPL SCHE DULE	REMARKS
1)	L T (415 V) Motors	Refer Note 1				ABB	FARIDABAD	A		UPTO 55KW
						ABB	BANGALORE	A		55KW – 200KW
						BHARAT BIJLEE	MUMBAI	A		RQP, FOR FLAME PROOF ALSO
						CGL	AHMEDNAGAR	A		FOR FLAME PROOF ALSO
						JYOTI	BARODA	A		
						KEC	BANGALORE	A		FOR FLAMEVPROOF ALSO
						KEC	HUBLI	A		UPTO 90KW: FOR FLAME PROOF ALSO
						LHP	SOLAPUR	A		UPTO 200KW
						MARATHON	KOLKATA	A		FOR FLAME PROOF ALSO
						NGEF	BANGALORE	A		UPTO 15KW
						SIEMENS	MUMBAI	A		
2)	HT MOTOR					BHEL	BHOPAL	A		

169

Deptt.

एनटीपीसी NTPC						LIST OF ITEMS REQUIRING QP APPROVAL & ACCEPTABLE VENDOR ; CONTRACTOR-M/S BHEL			REVISION NO. 00 DATE 20th April 2017	
SI. No.	ITEM	QP / INS CAT.	QP No:- 9585-001-	QP SUB. SCH.	QP APPL SCHE DULE	SUB-SUPPLIERS	PLACE	SUB-SUPPLIER APPL. STATUS AS	SC APPL SCHE	REMARKS

NOTE 1 : FOR LT MOTORS

a) Less than 30 KW

Acceptance of Motor less than 30 KW is based on COC of the manufacturer & the contractor confirming as follows:
It is hereby confirmed that the above mentioned motor /motors was/ were manufactured taking care of NTPC specific requirements regarding ambient temp., voltage & frequency variation, hot starts, pull out torque, starting KVA/KW, temp. rise, distance between centre of stud & gland plate and tested in accordance with approved drawing /data sheets.

b) 30 KW -50KW

Acceptance of Motor rating between 30 KW & 50 KW is based on NTPC review of Routine Test inspection report as per IS 325 witnessed by main contractor along with COC of the manufacturer & the contractor confirming as follows:
It is hereby confirmed that the above mentioned motor /motors was/ were manufactured taking care of NTPC specific requirements regarding ambient temp., voltage & frequency variation, hot starts, pull out torque, starting KVA/KW, temp. rise, distance between centre of stud & gland plate, space heater and tested in accordance with approved drawing /data sheets.

c) Above 50 KW as per NTPC approved quality plan

Approval Conditions attached to above vendors-as applicable shall prevail.

General Notes:

1) Vendor list & category of the mandatory spares shall be as mentioned above.
2) For item not appearing in the above list, main contractor to approach NTPC for acceptable vendors & inspection categorization of the same.
3) NTPC Approval conditions to above identified vendors shall be adhered to. Vendor's approval conditions will be informed on specific request of Main Contractor.

NTPC

Bharat Heavy Electricals Limited PS-MKTG Delhi

JATIN GAHLAWAT, BHEL

Deptt.

170

एनटीपीसी NTPC

LIST OF ITEMS REQUIRING QP APPROVAL & ACCEPTABLE VENDOR
Contractor-M/S BHEL

REVISION NO. 00
DATE 24th April 2017

Sl. No.	ITEM	QP / INS CAT.	QP No:- 9578-001-QVE-	QP SUB. SCH.	QP APPL SCHEDULE	SUB-SUPPLIERS	PLACE	SUB-SUPPLIER APPL. STATUS AS PER NTPC	SC APPL SCHEDULE	REMARKS
13.	Junction boxes / Link Boxes/ Test Link Box/ Adopter box, Switch Boxes, Pull Boxes (Hot Dip Galvanized)	III				Main contractor approved sources with galvanization from NTPC approved sources (Note-2)		Noted		
14.	FRP Junction boxes	II	10			Main Contractor approved sources		Noted		
16.	Cable glands	III				Main contractor approved sources		Noted		
17.	Cable lugs	III				M/s Dowell	Mumbai	A		
						M/s Billets Elektro Werke Ltd.	Umbergaon	A		

Bharat Heavy Electricals Limited ★ PS-MKTG Delhi

Patratu Vidyut Utpadan Nigam Limited ★ Distt-Ramgarh(Jharkhand) ★ C & M Deptt.

196

एनटीपीसी NTPC		LIST OF ITEMS REQUIRING QP APPROVAL & ACCEPTABLE VENDOR Contractor-M/S BHEL	REVISION NO. 00 DATE 24th April 2017

Sl. No.	ITEM	QP / INS CAT.	QP No:-9578-001-QVE-	QP SUB. SCH.	QP APPL SCHEDULE	SUB-SUPPLIERS	PLACE	SUB-SUPPLIER APPL STATUS AS PER NTPC	SC APPL SCHEDULE	REMARKS
						(3 D)				
						M/s Chetna	Nasik	A		
						Additionally Any make's model with VDE or CE or UL or CSA marking or BIS approved with CML no. Refer Note-3		Noted		

C & M Deptt.

एनटीपीसी NTPC		LIST OF ITEMS REQUIRING QP APPROVAL & ACCEPTABLE VENDOR Contractor-M/S BHEL	REVISION NO. 00 DATE 24th April 2017

Sl. No.	ITEM	QP / INS CAT.	QP No:- 9578-001-QVE-	QP SUB. SCH	QP APPL SCHEDULE	SUB-SUPPLIERS	PLACE	SUB-SUPPLIER APPL STATUS AS PER NTPC	SC APPL SCHEDULE	REMARKS
1. M/s M J Engg,Delhi 2. M/s Jamna Metal,Delhi 3. M/s A.V. Engg, Kolkata 4. M/s Inar Profiles, Vishakapatnam 5. M/s Anand Udyog, Mumbai 6. M/s Techno Engg,Chandigarh 7. M/S Steelite Engg, Mumbai	8. M/s National Galvanizer, Kolkata 9. M/s Unistar Galvanizer, Kolkata 10. M/s B.P. Project. Kolkata 11. M/s Bajaj Pune 12. M/s Electrocare Industries, Mumbai 13. M/s B.G. Shirke, Pune 14. M/s Gurpreet Galvanizer, Hyderabad 15. M/s Sigma, Mumbai	16. M/s Radhakrishnan Shetty, Chennai 17. Karamtara Mumbai 18.Poona Galvanizers Pune 19. Neha Galvanizer- Kolkata 20. Unitech galvanizers- Hoogly 21. Gurpreet galvanizers- Hyderabad 22- DMP Projects- Kolkata	*Additional galvanizer/s , if any , proposed by manufacturer through main contractor during detailed engineering shall be reviewed & assessed by NTPC as per the merits of the case.*						

Note-3 : VDE / CE / UL / CSA MARKING FOR PRODUCT QUALITY: SELF CERTIFICATION/VALID CERTIFICATION FROM THIRD PARTY AGENCY OR BIS APPROVAL LETTER WITH CML NO. FOR PRODUCT QUALITY SHALL BE SUBMITTED FOR NTPC's INFORMATION

NTPC

Bharat Heavy Electricals Limited PS-MKTG Delhi

Patratu Vidyut Utpadan Nigam Limited Distt-Ramgarh(Jharkhand) C & M Deptt.

(JATIN GAHLAWAT)
BHEL

202

QA CO-ORDINATION PROCEDURE for FGD SYSTEM PKG. OF LOT -2 PROJECTS (7 PROJECTS)

1. PURPOSE:

This document specifies procedure to be adopted for the coordination of QA&I activities relating to FGD System pkg. of Lot-2 projects (7 projects) to satisfy the QA&I requirements laid down in contract.

2. SCOPE:

This document specifies procedure of:

- Vendor Approval
- Quality Plan - Bought-out items/Manufacturing items approval/finalization.
- Field Quality Plan approval/finalization.
- Inspection/Testing of equipments/items.
- Dispositioning of Non-conformities.
- Dispatch clearance of equipments/items.
- QA documentation Package
- Quality audit & surveillance.

3. DEFINATIONS:

3.1 **NTPC Inspector:** Means NTPC's Own Inspector/duly authorized third party inspection agency.

3.2 **Resident Inspector:** Means NTPC's own inspector posted in the country of origin of the equipment or manufacturing works. NTPC Inspectors at Regional Inspection Offices near the works of BHEL and at other Regional Inspection Offices are considered as resident inspectors.

4. PROCEDURE:

4.1 CO ORDINATORS AND CORRESPONDANCE

4.1.1 Overall QA coordinator of BHEL for this contract shall be informed within four week's of LOI / effective date of contract.

4.2 VENDOR APPROVAL

4.2.1 List of items requiring vendor approval is identified and enclosed with LOA. The List contains, the vendors as proposed by BHEL, and acceptable vendors to NTPC are marked with "A" as APPROVED. Vendors not known to NTPC for which details are required to be submitted by BHEL as per agreement are marked 'DR'. Other information regarding vendor approval is as per agreed MOM.

4.2.2 BHEL shall submit the complete vendor details for "DR" Category vendors (in NTPC prescribed format) as per MOM.

4.2.3 Upon receipt of complete vendor details, NTPC shall review and respond expeditiously.

4.2.4 Monthly progress report of vendor approval for vendors identified in 'DR' category shall be furnished by BHEL overall coordinator.

4.2.5 Within three weeks of release of purchase order for bought out items/ components. BHEL shall furnish to NTPC a copy of the purchase order without price details but together with detailed purchase specification, QP and delivery conditions.

4.3 QUALITY PLANS

4.3.1 List of items requiring approval of quality plans shall be finalized by NTPC during detailed engineering.

4.3.2 BHEL shall finalize a realistic schedule of submission of QPs based on project requirements prior to LOA which shall be incorporated on L-2 network.

4.3.3 BHEL shall submit to NTPC. the Quality Plans with reference documents as per schedule of submission. The final submission of Quality Plans shall be furnished to NTPC in NTPC's online system C folder.
The quality plans shall be submitted for Cat-I & II items as per with additional essential attributes as per NTPC requirement (quantum of check, acceptance norms). Vendor's name may be provided on separate sheet attached with QAP.
Extracts of reference documents will be annexed. However, any other interlinking documents mentioned in the extracts can be viewed by NTPC in BHEL/ collaborator's works. Acceptance criteria shall be reviewed by NTPC in case of deviation from NTPC specification.
For other equipment, quality plans shall be submitted in NTPC format during execution phase for approval. Witness points / documentation requirements shall be mutually agreed.

4.3.4 Reference documents which were already submitted along with MQP/RQP/SQP for the earlier projects need not be submitted provided there is no change/revision in the document submitted last, whereas for the new/fresh MQP/RQP/SQP. the relevant documents shall be submitted along with the above Quality plans. Resubmission of RQP/SQP shall be done wherever changes are made in the already approved RQP/SQP for the earlier projects.

4.3.5 RQP/SQP shall be furnished along with all reference documents such as purchase specn, drg, data sheet, test procedure, plant standards, etc. In case where RQPs are already finalized, BHEL shall confirm that items required for Lot-2 FGD projects (7 projects) is exactly same or shall state minor changes that are applicable. For exactly same items, RQPs already finalized shall be made applicable for Lot-2 FGD projects (7 projects) also.

4.3.6 Monthly progress report of quality plan submission/approval shall be furnished by BHEL overall coordinator in attached format.

4.4 FIELD WELDING AND FIELD QUALITY PLAN

4.4.1 The field quality plan for equipment and services shall be furnished by BHEL and their Vendors, so as to finalize the same at least 2 months prior to start of work and shall include the quality practices and procedures followed by them during various stages of site activities from receipt of material/equipment till final erection. The list of FQP to be approved by NTPC shall be tied up during execution.

4.4.2 The welding consumable approved by OEM/Main contractor shall be used for site welding.

4.4.3 M/s BHEL's FQA manpower deployment shall be tied up after award.

4.5 INSPECTION

4.5.1 The notice period for inspection of materials/components/equipments for witnessing of the CHP stages by NTPC at the vendor's works shall be as follows:

(a) Vendors of Indian origin - 10 working days.
(b) Vendors of Foreign origin - 45 days

4.5.2 All the matters regarding inspection call shall be coordinated as follows:

4.5.4.1 **For supplies of other than Indian origin:** BHEL shall issue inspection call notice to NTPC-QA coordinator.

4.5.4.2 **For supplies of Indian origin:** BHEL/ their vendors will issue an inspection call to the concerned NTPC-RIO office. BHEL's relevant offices shall closely co-ordinate with NTPC RIO for inspection of bought out items.

4.5.5 Where witnessing of the test is waived off in writing by NTPC, BHEL/vendors shall proceed with the test which shall be deemed to have been carried out in the presence of NTPC inspector and shall forward duly certified copies of the test reports to the concerned NTPC inspection office as follows:

a. For the tests conducted within the BHEL's premises shall be within one week
b. For the tests conducted at vendors' premises shall be within two weeks.

In case of any objection, the concerned RIO office shall notify the same to the concerned BHEL/vendors with in 5 working days from receipt of the test reports.

4.5.6 For the witnessed tests, when the factory test at identified CHP stages have been satisfactorily completed including computation of test results wherever applicable, NTPC inspector shall sign jointly with BHEL/vendors/authorized representative(as applicable as per approved QAP) on the CHP Clearance/Interim Inspection report in the format .

4.5.7 For the witnessed tests, in case of deviation, NTPC inspector shall convey their non-conformities in writing on the CHP report itself for clarification by BHEL/Vendors, who shall give due considerations to the objections raised and shall take corrective measures (as per the procedure laid down in clause 4.7 after due approval from NTPC) to rectify the non-conformities and shall confirm in writing to the concerned inspection office on rectification of the objections raised. However decision of NTPC shall be final and binding upon BHEL/vendors within the purview of the contract requirements.

4.5.8 BHEL will make available to the NTPC inspector their relevant documents and plant standards/procedure relevant to the checks/tests carried out on material/items equipments. Further, BHEL/vendors shall also ensure the availability of approved drawings/data sheets and approved Quality Plan at the place of inspection.

4.5.9 **INSPECTION PLAN:** To facilitate advance planning of inspection of supplies, in addition to giving inspection notice at identified CHP stages as per approved QAP, BHEL shall furnish three monthly rolling inspection programme every month indicating schedule dates of inspection at identified CHP stages. Such a programme shall be updated each month and a copy of the

same is made available to the resident inspector/RIO as applicable. Such programme shall be confirmed by specific inspection call in accordance with clause 4.5.1 above.

4.5.10 Three monthly inspection programme for shop manufactured & BOIs shall be furnished directly to respective NTPC-RIO.

4.5.11 BHEL contracts/commercial/QA shall furnish monthly Inspection status report for previous month including pending calls and exception reports/NCR on or before 7th of every month.

4.6 **QUALITY AUDIT: BHEL/VENDORS** shall provide the necessary facilities to NTPC inspector/team for carrying out of the Quality Surveillance and Audits as envisaged in the contract.

4.7 **NON-CONFORMITY DISPOSITIONING PROCEDURE:**

4.7.1 Whenever any deviation is observed with respect to relevant document and good Engg practices, the same shall be referred along with justification to NTPC office where inspection call has been raised by BHEL/vendors. The details shall be furnished in the format attached for NTPC review and necessary action. NCR can be raised irrespective of the CHP stages to the concerned inspection office in whose jurisdiction the item/equipment is being manufactured.

4.7.2 Non-conformities with respect to the site activities shall also be dealt with similarly except that the NCR in the specified format shall be routed through NTPC-FQA group.

4.8 **Material Despatch Clearance Certificate (MDCC)** upon satisfactory completion of all tests/inspection including type test as required by the approved documents (Cat-I approved Quality Plan drawing/data sheet as applicable). NTPC inspector/Authorized Representative shall issue the MDCC in prescribed format attached against approved BBU

4.8.1 Responsibility for Issuing MDCC:

Before requesting NTPC for issuance of MDCC, BHEL shall verify and confirm that the equipment meets the stipulated technical requirements as per the contract. In NTPC, the responsibility of issuing MDCC shall be as follows:

4.8.1.1 Where inspection by NTPC is envisaged in QP.

4.8.1.1(a) **INDIGENOUS SUPPLIES:**

The concerned Regional Inspection Office under whose jurisdiction the manufacturer is located. Inspecting Engineer or reviewing engineer (in case of waiver of presence of NTPC engineer) shall issue the MDCC.

4.8.1.1(b) **FOREIGN SUPPLIES:**

For items directly dispatchable to site from foreign manufacturer, the MDCC shall be issued by NTPC's inspecting engineer. In case of waiver of presence of NTPC engineer, the MDCC shall be issued by CQA Engineer on satisfactory review of test reports.

For items to be brought to BHEL works from foreign manufacturer, before final despatch to site, MDCC shall be issued by relevant Resident Inspector/RIO after satisfactory activities at BHEL works and on review of CHP report of NTPC's Inspecting Engineer for inspection at foreign manufacturer's works or on verifying acceptance report of CQA, incase of waiver of presence of NTPC Engineer for inspection at foreign source.

NOTE: MATERIAL inspected by RIO-A at the work of sub-contractor in their respective jurisdiction & dispatched to the works of the other contractor for assembly or otherwise in the jurisdiction of RIO-B for

final despatch to project site. shall be accorded despatch clearance on a CHP clearance report by RIO-A and the MDCC of the completed item/equipment will be issued by RIO-B as per the approved BBU.

4.8.1.2 In case only review of TC by NTPC has been envisaged as per approved QP. for such items test certificates shall be submitted to NTPC resident inspection in respect of BHEL manufactured item and to concerned RIO where level-1 vendor is located for such BOIs. for issuance of MDCC. It is clarified that wherever multilevel vendors are not applicable. for bought out items of this category. BHEL's shall submit the test certificate to NTPC's resident inspection.

4.8.1.3 In case where QP has not been envisaged, all such materials shall be cleared on the basis of COC from BHEL. COC shall be submitted on similar line as per Clause No. 4.8.1.2.

4.8.1.4 As per Tech specification. no item shall be dispatched by BHEL without obtaining MDCC from NTPC.

4.9 **QUALITY ASSURANCE DOCUMENTATION PACKAGES:** BHEL shall submit to NTPC QA the Quality Assurance documents in two hard copies and two CD ROM.

4.10 **QP/INSPECTION CATEGORY :**

CAT – I: For those items the Quality Plans are approved by NTPC and final acceptance will be on physical inspection witness by NTPC.

CAT – II: For those items the Quality Plans are approved by NTPC. However no physical inspection shall be done by NTPC. The final acceptance by NTPC shall be on the basis of review of documents as per QP.

CAT-III: For those items main supplier approved Quality Plan. The final acceptance by NTPC shall on the basis of Certificate of Conformance by main supplier.

Further, as it is clearly understood that NTPC reserves the right to conduct Surveillance Inspection/ Audit of the material, which will ve identified in inspection category Cat-II/ Cat-III by NTPC QA during detailed engg., to verify the effectiveness of Quality System of M/s BHEL and conformance of the offered lot. to the applicable Standards/ requirements. It is agreed that M/s BHEL will submit the copies of unpriced Purchase Order (as provided in GTR) of the orders placed on vendors for the items other than those listed in table at Sl. No. 2.0 above, to NTPC for the purpose of surveillance audit, if desired by NTPC, prior to issue of Despatch Clearance of the concerned item.

(NTPC) (BHEL)

	PROJECT: FGD LOT-2	LIST AND STATUS OF ITEM REQUIRING QP AND SUB-SUPPLIER APPROVAL	Doc. No: QA-MH-01
	PACKAGE: FGD PACKAGE	Sub systems: Mechanical	Revision No: 00
	CONTRCATOR/ MAIN SUPPLIER: BHEL-ISG BANAGALORE		Date: 17/12/2018
	CONTRACT NO.: CS-0011-109(2)-9		

SR.NO	ITEM	QP/INS-PNCAT	QP NO.	PROPOSED SUPPLIER	PLACE	SUB-SUPPLIERS APPL STATUS /CATEGORY	REMARKS
1	CRUSHER & VIBRATING GRIZZLY FEEDER/VIBRATING FEEDER FOR LIME/ GYPSUM HANDLING SYSTEM	I		TRF LTD.	JAMSHEDPUR	DR	
		I		LARSEN & TOUBRO	KANSBAHAL	DR	
		I		ELECON ENGINEERING CO.	V V NAGAR	DR	
		I		MCNALLY BHARAT ENGINEERING LTD	KOLKATA	DR	
		I		THYSSENKRUPP INDUSTRIES INDIA PVT LTD	PUNE	DR	CRUSHER ONLY
		I		SANDVIK ASIA PRIVATE LIMITED	FINLAND	DR	
		I		TERRASOURCE GLOBAL CORPORATION	USA	DR	CRUSHER ONLY
		I		MCNALLY SAYAJI	VADODARA	A	UP TO 600 TPH FOR CRUSHER
		I		MCNALLY SAYAJI ENGINEERING LIMITED	KUMARDHUBI	DR	
2	FABRIC BELTING (F R GRADE)	I		PHOENIX CONVEYOR BELT	KOLKATA	A	UPTO 2200 MM WIDTH
		I		SEMPERTRANS NIRLON (P) LTD	MUMBAI	A	UPTO 1600 MM WIDTH
		I		HINDUSTAN RUBBERS	SILVASA	A	UPTO 1600 MM WIDTH
		I		NORTHLAND RUBBER	SONEPAT	A	UPTO 2200 MM WIDTH
		I		ORIENTAL RUBBER INDUSTRIES LTD ,	PUNE	A	UPTO 2200 MM WIDTH
		I		IMASS S.A	GREECE	A	UPTO 2400 MM WIDTH
		I		MRF	CHENNAI	A	UPTO 1600 MM WIDTH
		I		RAVASCO TRANSMISSION LTD.	VAPI	A	UPTO [illegible] MM WIDTH
		I		FORECH	CHENNAI	A	UPTO 1600 MM WIDTH
		I		YOKOHAMA	JAPAN	A	UPTO 2400 MM WIDTH
		I		JONSON RUBBER INDUSTRIES	NEW DELHI	DR	
		I		NRC Industries Limited , amritsar	PUNJAB	DR	
		I		SOMI CONVEYOR	JODHPUR	A	UPTO 2000 MM WIDTH
		I		EUREKA COVEYOR BELTINGS PVT LTD.,	KOTA	DR	
		I		FLEXER RUBBER PVT LTD	KOLKATA	DR	
3	HELICAL GEARBOX	I		SHANTI GEARS	COIMBATORE	A	Max size 560
		I		ELECON	V V NAGAR	A	
		I		SIEMENS (FLENDER)	KHARAGPUR	A	
		I		PREMIUM TRANSMISSION	PUNE/FALTA	A	Up to size 710 / 400
		I		SIEMENS (FLENDER)	GERMANY	A	
		I		SEW EURODRIVE GMBH & CO	GERMANY	DR	
		I		NEW ALLENBURY WORKS	KOLKATA	A	
4	PLANETARY GEARBOX	I		ELECON	VV NAGAR	A	
		I		SIEMENS (FLENDER)	GERMANY	A	
		I		MOVENTAS	GERMANY	A	
		I		PREMIUM TRANSMISSION LTD.	PUNE/FALTA	DR	
		I		BREVINI	ITALY	A	
		I		SEW EURODRIVE GMBH & CO	GERMANY	A	
5	FLUID COUPLING (Traction Type)	I		PREMIUM TRANSMISSION	AURANGABAD	A	
		I		ELECON	V V NAGAR	A	
		I		FLUIDOMAT	INDORE	A	
		I		VOITH (INDIA)	HYDERABAD	A	
		I		VOITH	GERMANY	A	
	FLUID COUPLING (Scoop Type)	I		FLUIDOMAT	INDORE	A	UPTO 15-1330

	Project : LOT-2					ELECTRICAL ITEMS		Doc No	:		
	Package : EGD					INDICATIVE VENDOR LIST FOR ITEMS REQUIRING QUALITY PLAN AND SUB-VENDOR APPROVAL		Rev No	:	CS-0011-104251-0	
	Supplier : DHFI							Date	:		
	Contract No: CS-0011-104251-0							Page	:		
Sl.No	ITEM DESCRIPTION	QP / Insp. Cat.	QP No:	QP Sub. Sch.	QP approval Sch.	Proposed sub-supplier	Place	Sub-Supplier approval status / category	Sub-supplier Detail-submission sch	Remark	
1	Power Transformer (Oil Filled) - for Transformer					ABB	Vadodara	DR		up to 765 kV Class	SUB OR ITEM
						CG Power & Industrial Solutions Ltd	Mumbai-ept	OR		Up to 765 kV class	SUB OR ITEM
						GE T&D India Limited	Vadodara	DR		Up to 765 kV class including Short Bus for Approval Conditions Apply	SUB OR ITEM
						BHEL	Bhopal	DR		up to 800 kV Class	SUB OR ITEM
						GE T&D India Limited	Nasik	DR		up to 800 kV Class	SUB OR ITEM
						TELK	Angamally, Kerala	DR		up to 800 kV Class	SUB OR ITEM
						Toshiba	Hyderabad	DR		up to 800 kV Class	SUB OR ITEM
						CG Power & Industrial Solutions Ltd	Kalamassery	DR		up to 400 kV Class	SUB OR ITEM
						EMCO	Bhuvar	DR		up to 400 kV class	SUB OR ITEM
						Siemens	Mumbai	DR		up to 400 kV Class	SUB OR ITEM
						BHEL	Haridwar	DR		Upto 220 kV Class	SUB OR ITEM
2	Oil Filled Transformer	1				GE T&D	ALLAHABAD	DR			SUB OR ITEM
						ABB	VADODARA	OR			SUB OR ITEM
						SIEMENS	NAVI MUMBAI	DR			SUB OR ITEM
						CG Power & Industrial Solutions Ltd	KANDUKMARG	DR			SUB OR ITEM
						EMCO	THANE	DR			SUB OR ITEM
						TELK	ANGAMALY (KERALA)	DR			SUB OR ITEM
						BHEL	JHANSI	DR			SUB OR ITEM
						TOSHIBA	HYDERABAD	DR			SUB OR ITEM
						Schneider	Vadodara	DR		Up to 40 MVA 145 kV Class	SUB OR ITEM
						EAR	Ahmedabad	DR		Up to 20 MVA 145 kV Class	SUB OR ITEM
						Prime Metallon Ltd	Nellur	DR		up to 100 MVA 66/33 kV Class	SUB OR ITEM
						CG Power & Industrial Solutions Ltd	Malanpur	DR		up to 7.5 MVA 33 kV Class	SUB OR ITEM
						ICE	Surajpur	DR		up to 10 MVA 11 kV Class	SUB OR ITEM
						Andrew Yule	Durgapur	DR		up to 100 MVA 33 kV Class	SUB OR ITEM
						EMCO	Bilgaon	DR		Up to 16 MVA 33/11 kV Class	SUB OR ITEM
						EMCO	Butala	DR		up to 20 MVA 66 kV Class	SUB OR ITEM
						Lasmar	Modak	DR		Up to 16 MVA 66 kV Class	SUB OR ITEM
						Indotech Transformers	Chennai	DR		Up to 40 MVA 11 kV Class	SUB OR ITEM
						Kirloskar	Mysore	DR		Up to 16 MVA 66 kV Class	SUB OR ITEM
						Kirloskar	Pune	DR		up to 20 MVA 33 kV Class	SUB OR ITEM
						Indo	Agra	DR		up to 2.5 MVA, 11 kV Class. Approval Conditions Apply	SUB OR ITEM
						KEFFS Power Components Ltd	Silvassa	DR		Up to 2.5 MVA 33 kV Class	SUB OR ITEM
						Hammond Power Solutions	Hyderabad	OR		up to 100 MVA 33 kV Class	SUB OR ITEM
						Kirloskar RPG	Pune	DR		Up to 5 MVA 33 kV Class	SUB OR ITEM
						Sudhir Transformer	Bangalore	DR		Up to 2.5 MVA 11 kV Class	SUB OR ITEM
						SUDHIR POWER LTD	SILVASSA	DR		Up to 2.5 MVA 33 kV Class	SUB OR ITEM
						Technical Associates Ltd	Surajpur	DR		up to 16 MVA 33 kV Class Approval Conditions Apply	SUB OR ITEM
						VOLTAMP TRANSFORMERS LTD.	Vadodara	DR			SUB OR ITEM
						DANISH PRIVATE LIMITED	Jaipur	DR			SUB OR ITEM
						Tesla, Unit 2	23-A, B Sector, Industrial Area, Govindpura, Bhopal	DR		up to 10 MVA, 33 kV Class	SUB OR ITEM
2A	DRY TYPE TRANSFORMER					BHEL JHANSI	ALLAHABAD	DR			
						AMES IMPEX	VADODARA	DR			
						CROMPTON GREAVES	NAVI MUMBAI	DR			
						INDOTECH TRANSFORMERS	CHENNAI	DR			
						EMCO	THANE	DR			
						KANODIA ELECTRICALS	MEERUT	DR			
						RIMA TRANSFORMERS & CONDUCTORS	BANGALORE	DR			
						SEPHIE TRANSFORMERS	HYDERABAD	DR			
						SCHNEIDER	VADODARA	DR			
						TESLA TRANSFORMERS	BHOPAL	DR			
						UNIVERSAL TRANSFORMERS	BANGALORE	DR			
						VOLTAMP TRANSFORMERS	VADODARA	DR			
						EAR	AHMEDABAD	DR			
						CGL	Ahmednagar	A			

(Jatin Gokulawal)
RHFI

ANNEXURE-A

- Refer electrical specification for applicable sub-vendor list for motors.

- The list of all bought out items like gearbox, coupling, bearings etc. with makes and country of origin and contact details of the manufacturers to be mentioned along with offer to be submitted in the format attached in section II Annexure-6 as an information to BHEL.

- Acceptance of makes shall be subject to BHEL/ End customer acceptance during the detailed engineering without cost and delivery implication to BHEL.

- Make of any unlisted items shall be subject to customer / BHEL approval during detail engineering. For such items, bidder to furnish list of sub-vendors during detail engineering stage for Customer / BHEL's review and approval. Bidder shall furnish following supporting documentation within 1 month of placement of LOI. Thereafter no request for additional sub-vendor shall be entertained.

  a) Documentation to show that the equipment /system has been supplied for a plant of similar or higher capacity.

  b) Documentation in the form of certificate that the equipment/system has been operating satisfactorily for two years as on the scheduled date of bid opening.

- The complete list will be necessarily submitted within one month of placement of LOI to ensure timely placement of order for BOIs. Bidder to assess the capability of their proposed sub-vendors in terms of preparation of drawings, calculations, documents, quality assurance, supply of material etc. as per project schedule before placing the order on them.

SECTION-I Sub Section-D

ANNEXURE-II

MANDATORY SPARE LIST

TECHNICAL SPECIFICATION FOR AGITATOR 2 X 250 MW NSPCL BHILAI TPP - FGD		SPECIFICATION NO. :PE-TS-468-571-18000-A002
MANDATORY SPARE LIST		**ANNEXURE-II**
Sl. No.	**PARTICULARS**	**Unit / Quantity (Nos.)**
1.06.00	**Agitators**	
(A)	**Auxiliary Absorbent Tank Agitator**	
1	Impeller Assembly	1 no. of each type and size
2	Bearing Assembly	1 no. of each type and size
3	Motor	1 no. of each type and size
4	Belt and Pulley (If applicable)	1 no. of each type and size
5	Gear Box Assembly (If Applicable)	1 no. of each type and size
6	Agitator shaft assembly	1 no. of each type and size
7	Shaft seal	1 no. of each type and size
8	Complete Agitator assembly	1 no. of each type and size
(B)	**Limestone Slurry Storage tank Agitator**	
1	Impeller Assembly	1 no. of each type
2	Bearing Assembly	1 no. of each type
3	Motor	1 no. of each type
4	Belt and Pulley (If applicable)	1 no. of each type
5	Gear Box Assembly (If Applicable)	1 no. of each type
6	Agitator shaft assembly	1 no. of each type and size
7	Complete Agitator assembly	1 no. of each type and size
(C)	**Primary Hydrocyclone feed tank Agitator**	
1	Impeller Assembly	1 no. of each type
2	Bearing Assembly	1 no. of each type
3	Motor	1 no. of each type
4	Belt and Pulley (If applicable)	1 no. of each type
5	Gear Box Assembly (If Applicable)	1 no. of each type
6	Agitator shaft assembly	1 no. of each type and size
7	Complete Agitator assembly	1 no. of each type and size
(D)	**Secondary Hydrocyclone feed tank Agitator**	
1	Impeller Assembly	1 no. of each type
2	Bearing Assembly	1 no. of each type
3	Motor	1 no. of each type
4	Belt and Pulley (If applicable)	1 no. of each type
5	Gear Box Assembly (If Applicable)	1 no. of each type
6	Agitator shaft assembly	1 no. of each type and size
7	Complete Agitator assembly	1 no. of each type and size
(E)	**Filtrate water tank Agitator**	
1	Impeller Assembly	1 no. of each type
2	Bearing Assembly	1 no. of each type
3	Motor	1 no. of each type
4	Belt and Pulley (If applicable)	1 no. of each type
5	Gear Box Assembly (If Applicable)	1 no. of each type
6	Agitator shaft assembly	1 no. of each type and size
7	Complete Agitator assembly	1 no. of each type and size
(F)	**Waste water Tank Agitator**	
1	Impeller Assembly	1 no. of each type
2	Bearing Assembly	1 no. of each type
3	Motor	1 no. of each type
4	Belt and Pulley (If applicable)	1 no. of each type
5	Gear Box Assembly (If Applicable)	1 no. of each type
6	Agitator shaft assembly	1 no. of each type and size
7	Complete Agitator assembly	1 no. of each type and size
(G)	**AGITATOR FOR DRAIN PIT (FOR ABSROBER AREA, GYPSEM AREA AND LIMESTONE AREA)**	
1	Impeller Assembly	1 no. of each type and size
2	Bearing Assembly	1 no. of each type and size
3	Motor	1 no. of each type and size / rating
4	Belt and Pulley (If applicable)	1 no. of each type and size
5	Gear Box Assembly (If Applicable)	1 no. of each type and size
6	Agitator shaft assembly	1 no. of each type and size
7	Complete Agitator assembly	1 no. of each type and size

Note:

1)One set means 100% complete replacement of the particular component/equipment, as mentioned i.e., Set for the particular equipment, would include all components required to replace the item. For example, a set of bearing shall include all hardware normally required while replacing the bearings. It is further, intended that the assembly / sub-assembly which have different orientation (like left hand or right hand, top or bottom), different direction of rotation or mirror image positioning or any other reasons which result in maintaining two different sets of the spares to be used for the subject assembly / sub-assembly, these shall be considered as different types of assembly/sub-assembly.

2) Wherever the quantities have been indicated for each type, size, thickness, material, radius, range etc. these shall cover all the items supplied and installed.

3) In case spares indicated in the list are not applicable to the particular design offered by the bidder, the bidder should offer spares applicable to offered design with quantities generally in line with the approach followed in the above list.

TECHNICAL SPECIFICATION FOR AGITATOR 2 X 250 MW NSPCL BHILAI TPP - FGD		SPECIFICATION NO. :PE-TS-468-571-18000-A002
MANDATORY SPARE LIST		ANNEXURE-II
Sl. No.	PARTICULARS	Unit / Quantity (Nos.)
4) Any item which is quoted as “not applicable” in the above list and is found to be “applicable” at a later date shall be supplied by the Bidder without any commercial implications. The Bidder shall note that if there in any change/ variation in equipment/ system during detail engineering which causes any change/ variation in the essential spares quantity, the same shall be supplied without any commercial implications. The price indicated for the mandatory spares shall be considered for the purpose of evaluation.		
5) Mandatory spares shall not be dispatched before dispatch of corresponding main equipment. Pls. refer NIT for delivery schedule. The spares shall be treated and packed for a long storage under the climatic condition prevailing at site.		
6) All spares supplied under this contract shall be strictly interchangeable with parts for which they are intended for replacements. These spares should include all mounted accessories like components, boards, add or items, fitting, connectors etc. and be complete in all respects so that the replacement of the main items by these spares does not require any additional item. The vendors must conform the pair to pair compatibility of each electrical spares modules with the modules supplied in the original package. All electronic modules should be pre-set and/or pre-programmed for ready use at site. Alternatively, suitable instruction sheet indicating the details of required PCB jumper position, BCD which is setting, EPROM/PROM listing etc should be packed along with each module. Also a caution mark sign should be put on all such module which needs pre-setting/pre-programming before putting them in to service. The spare shall be treated and properly packed for long term storage.		
7) Each spare shall be clearly marked and labelled on the outside of the packing with its description. When more than one spare part is packed in single case, a general description of the contents shall be shown on the outside of such case and a detailed list enclosed. All cases, containers and other packages must be suitably marked and numbered for the purpose of identification.		
8) Set for the particular equipment, would include all components required to replace the item, for example a set of bearing shall include all hardware normally required while replacing the bearings. It is further intended that the assembly / sub-assembly which have different orientation (like left hand or right hand, top or bottom), different direction of rotation or mirror image positioning or any other reasons which result in maintaining two different sets of the spares to be used for the subject assembly / sub-assembly, these shall be considered as different types of assembly/sub-assembly.		
9)All the spares shall be manufactured along with the main equipment components as a continuous operation as per same specification and quality plan.		
10)The Contractor shall warrant that all spares supplied will be new and in accordance with the Contract Documents and will be free from defects in design, material and workmanship.		

SECTION-I,
Sub Section-D

ANNEXURE-III
INPUT DRAWINGS (GAD OF TANKS)

`					
02	04-03-2020	Rev_02	VV	PNR	ACR/RSB
01	03-02-2020	Rev_01	VV	MVR/PNR	ACR/RSB
00	28-12-2019	Fresh Issue	VV	PNR	RSB
REV	DATE	DESCRIPTION / NOTE	PRD	CHD	APD

REVISIONS

TITLE:

Sizing Calculation & Selection parameter for all tanks

OWNER/PROJECT: NTPC LIMITED

NSPCL BHILAI EXPANSION POWER PROJECT
NSPCL BHILAI (2X250 MW) – FGD SYSTEM PACKAGE

EPC CONTRACTOR:

BHARAT HEAVY ELECTRICALS LTD.
BOILER AUXILIARIES PLANT, RANIPET

COLLABORATOR & QFGDM

MITSUBISHI HITACHI POWER SYSTEMS, LTD
AIR QUALITY CONTROL SYSTEMS TECHNOLOGY DIVISION, JAPAN

	BHEL		
PREPARED BY	Vidya V		STATUS : *FOR APPROVAL*
CHECKED BY	PNR/ MVR		BHEL CUST NO : G211, G212
APPROVED BY	ACR/ RSB		BHEL DOC NO : 4-FW-000-00618
			REV NO : 02

NTPC DRG./DOC NO. : 9993-109-PVM-U-009

Document title:

SIZING CALCULATION& SELECTION PARAMETER FOR ALL TANKS

NTPC Drawing No : **9993-109-PVM-U-009**

S.NO	NTPC COMMENTS	BHEL REPLY
1.	But for other projects of NTPC , BHEL have indicated >1.	Noted and corrected in revised document as per other NTPC projects.
2.	In which document, absorber sizing has been finalized?	Request NTPC to approve absorber design basis document – MDL- 9993-109-PVM-U-003
3.	Why different? Not replied suitably	Noted and tank sizing basis corrected in revised document.
4.	That means if LL is changed by vendor and therefore,in order to maintain your sizing criteria, L will also have to be changed. Is it so?	LL considered is worst case and it is unlikely to be higher than the indicated value. In case, LL is lower than the indicated value BHEL confirms that the tank size will not be changed.

Sizing Calculation & Selection parameter for all tanks

1. **Gas condition for Tank Sizing:**

S.No.	Gas Condition	Feature
1	VWO	FGD Design Point

2. **Tank Sizing Basis**

Tank size is decided as per the following

LL – Pump LL level m

L – LL + 0.2 m

H - Effective height m

HH - H + 0.2 m

Top - HH + 0.5 m(If tank Ht. <10m)

-HH + 0.8 m(If tank Ht. >10m)

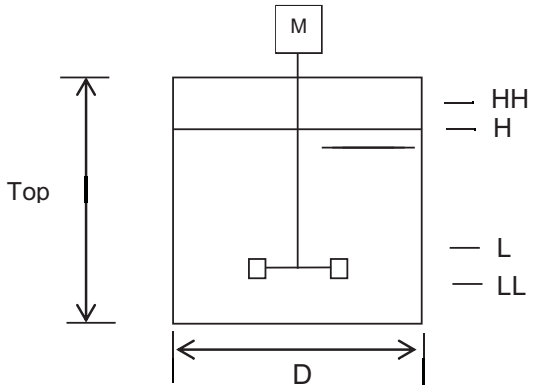

Effective volume = 3.14 / 4 x Φ ^ 2 x (H-L)

Hold volume = 3.14 / 4 x Φ ^ 2 x (HH)

H/D ratio = 1-1.2

S. No	Item No	Service	Design Spec	Process Parameter	Design Basis
1	00HTQ00BB001/002	Process Water Tank	4500 mmD X 4500 mmH Quantity = 2 nos.	Process Capacity	146.2 m3/h (Refer Mass Flow Balance (Design Point) data stream no. (<801> + <802> + <803> + <804> + <805>/2 + <806>) x units).
				Retention Time	0.25 hr
				Required volume	146.2 m3/h x 0.25 hr = 36.55 m3

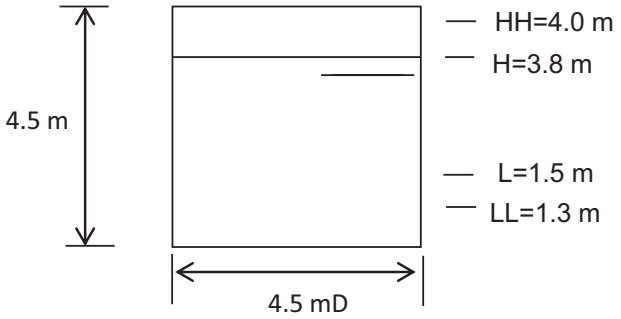

Tank Level is designated as follows

Top	4.5
HH	4.0
H	3.8
L	1.5
LL	1.3*

Effective volume

= 4.5 m Φ ^ 2 / 4 x π x (3.8-1.5) m = 36.58 m3 > 36.55 m3

Hold Volume

= 4.5 m Φ ^ 2 / 4 x π x 4.0 m = 63.62 m3

* LL level will be finalized by vendor's information of Process water pump.

S. No	Item No	Service	Design Spec	Process Parameter	Design Basis
2	00HTQ01BB001/002	Cake wash (Clarified water) Tank	3000 mmD X 3000 mmH Quantity = 2 nos.	Process Capacity for each tank	5.724 m3/h (Refer Mass Flow Balance Design Point data stream no.(<805>/2) x 2 units
				Retention Time	1 hr
				Required volume	5.724 m3/h x 1.0hr = 5.724 m3

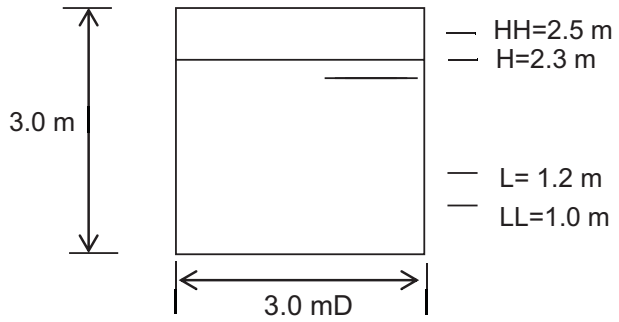

Tank Level is designated as follows

Top	3.0
HH	2.5
H	2.3
L	1.2
LL	1.0*

Effective volume

= 3.0 m Φ ^ 2 / 4 x π x (2.3-1.2) m

=7.77 m3 >5.724 m3

Hold Volume

= 3.0 m Φ ^ 2 / 4 x π x 2.0 m

=17.67 m3

*LL level is finalized by vendor's information of Cake wash tank pump.

S. No	Item No	Service	Design Spec	Process Parameter	Design Basis
3	00HTM01BB001	Belt Filter Wash Tank	3000 mmD X 3000 mmH Quantity = 2 nos.	Process Capacity for each tank	5.724 m3/h (Refer Mass Flow Balance Design Point data stream no.(<805>/2) x 2 units
				Retention Time	1 hr
				Required volume	5.724 m3/h x 1.0hr = 5.724 m3

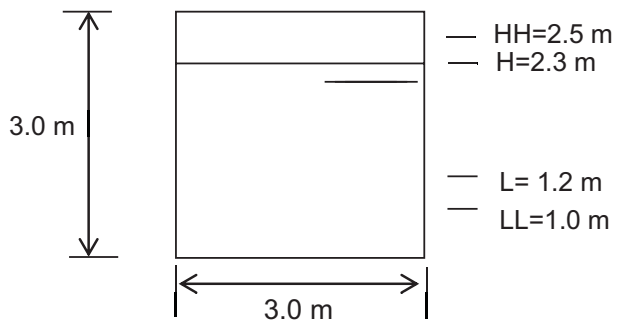

Tank Level is designated as follows

Top	3.0
HH	2.5
H	2.3
L	1.2
LL	1.0*

Effective volume

= 3.0 m Φ ^ 2 / 4 x π x (2.3-1.2) m

=7.77 m3 >5.724 m3

Hold Volume

= 3.0 m Φ ^ 2 / 4 x π x 2.0 m

=17.67 m3

*LL level is finalized by vendor's information of belt filter wash tank pump.

S. No	Item No	Service	Design Spec	Process Parameter	Design Basis
4	00HTM 03 BB001	Filtrate water Tank	4000 mm D X 4000 mmH Quantity = 1 no (Common for two units)	Process Capacity	48.442 m3/h (Stream No: <402> x 2 Units)
				Retention Time	0.5 Hr
				Required volume	48.442 m3/h x 0.5 hr =24.221 m3

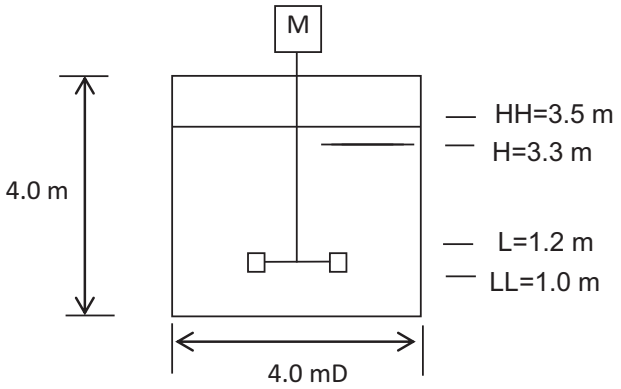

Tank Level is designated as follows

Top	4.0
HH	3.5
H	3.3
L	1.2*
LL	1.0*

<u>Circular Tank</u>

Effective volume

= 4.0 m Φ ^ 2 / 4 x π x (3.5-1.2) m

= 28.9 m3>24.221 m3

Hold Volume

= 4.0 m Φ ^ 2 / 4 x π x 3.5 m = 43.98m3

*L and LL level is finalized by vendor's information of filtrate water pump and agitator.

S.No	Item No	Service	Design Spec	Process Parameter	Design Basis
5	00HTM00 BB001	Primary Hydro cyclone feed Tank	5000 mm D X 5000mmH- Quantity = 1 no.	Process Capacity	54.204 m3/h (Stream No: <201> x 2 Units)
				Retention Time	1 Hour
				Required volume	54.204 m3/h x 1 hr = 54.204 m3

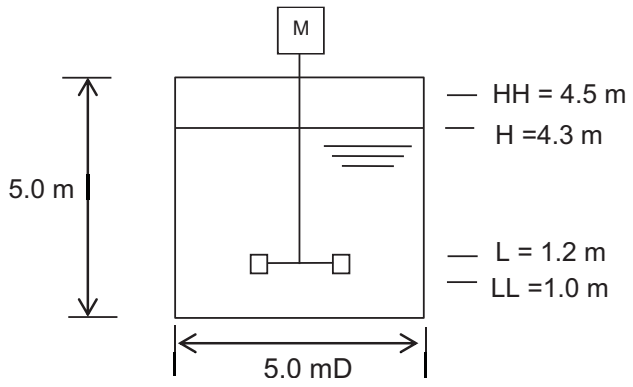

Tank Level is designated as follows

Top	5.0
HH	4.5
H	4.3
L	1.2*
LL	1.0*

<u>Circular Tank</u>

Effective volume

= 5.0 m Φ ^ 2 / 4 x π x (4.3-1.2) m = 60.9 m3 > 54.204 m3

Hold Volume

= 5.0 m Φ ^ 2 / 4 x π x 4.5 m =88.4 m3

*L and LL level is finalized by vendor's information of hydro cyclone feed pump and agitator.

S.No	Item No	Service	Design Spec	Process Parameter	Design Basis
6	00HTM04 BB001	Secondary Hydro cyclone feed Tank	4000 mm D X 4500mmH- Quantity = 1 no.	Process Capacity	31.32 m3/h (Stream No: <202> x 2 Units)
				Retention Time	1 Hours
				Required volume	31.32 m3/h x 1 hr = 31.32 m3

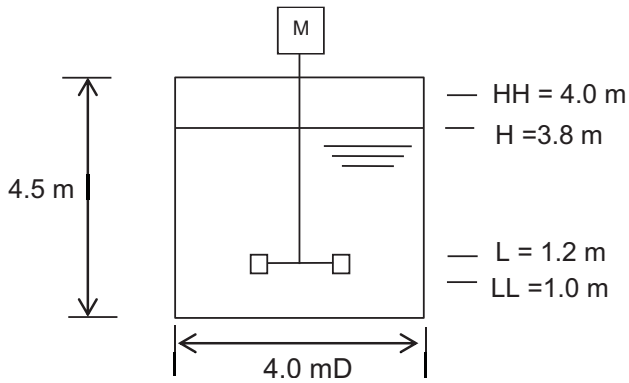

Tank Level is designated as follows

Top	4.5
HH	4.0
H	3.8
L	1.2*
LL	1.0*

<u>Circular Tank</u>

Effective volume

= 4.0 m Φ ^ 2 / 4 x π x (3.8-1.2) m = 32.67 m3>31.32 m3

Hold Volume

= 4.0 m Φ ^ 2 / 4 x π x 4.0 m =50.3 m3

*L and LL level is finalized by vendor's information of hydro cyclone feed pump and agitator.

S. No	Item No	Service	Design Spec	Process Parameter	Design Basis
7	00HTM 05BB0 01	Waste water storage Tank	5500 mmD X 5500mmH- Quantity = 1 no.	Process Capacity	9.8 m3/h (Stream No: <205> x 2 Units)
				Retention Time	8.0 Hours
				Required volume	9.8 m3/h x 8.0 hr = 78.4 m3

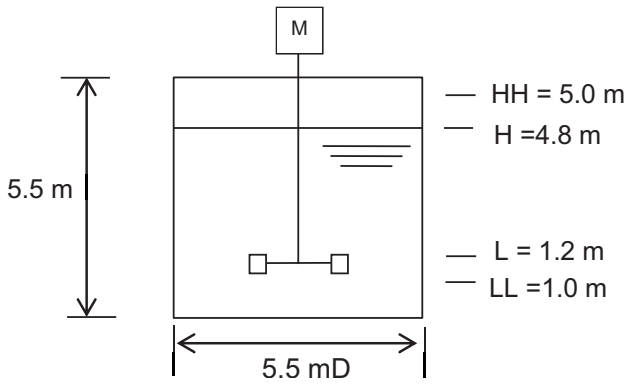

Tank Level is designated as follows

Top	5.5
HH	5.0
H	4.8
L	1.2*
LL	1.0*

<u>Circular Tank</u>

Effective volume

= 5.5 m Φ ^ 2 / 4 x π x (5.0-1.2) m

= 90.3 m3> 78.4m3

Hold Volume

= 5.5 m Φ ^ 2 / 4 x π x 5.0 m

=118.8 m3

*L and LL level is finalized by vendor's information of Waste water pump and agitator.

S. No	Item No	Service	Design Spec	Process Parameter	Design Basis
8	00HTK03BB001/002	Lime stone slurry storage Tank	9000 mmD X 10000mmH Quantity = 2 no. (1W+1S) (Common for two units)	Process Capacity for each tank	a) Limestone required = 4.662 TPH per unit from (Stream No: <501> x 2 Units) b) 20% (w/w) Limestone slurry = 4.662 TPH / 20% mass flow rate = 23.31 TPH per unit c) 20%(w/w) Limestone slurry density = 1.130 t/m3 d) 20% (w/w) Limestone slurry = 23.31 TPH / 1.130 volume flow rate = 20.63 m3/hr per unit
				Retention Time	12.0 hr
				Required volume	20.63 m3/h x 2 x 12 hr = 495.12 m3

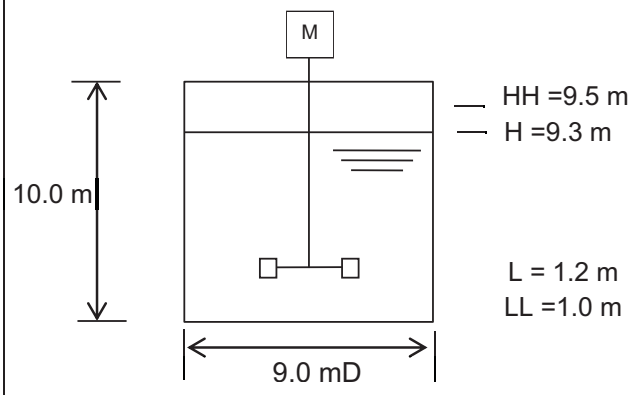

Tank Level is designated as follows

Top	10.0
HH	9.5
H	9.3
L	1.2*
LL	1.0*

<u>Circular Tank</u>

Effective volume

= 9.0 m Φ ^ 2 / 4 x π x (9.3-1.2) m

= 515 m3 > 495.1 m3

Hold Volume

= 9.0 m Φ ^ 2 / 4 x π x 9.5 m

= 604.4 m3

*L and LL level is finalized by vendor's information of Limestone slurry Feed pump and agitator.

S. No	Item No	Service	Design Spec	Process Parameter	Design Basis
9	00HTK0 0BB001	Auxiliary Absorbent Tank	10000mmDX 10000mmH Quantity = 1 no (Common for two units)	Process Capacity	Absorber Tank Volume = 724.8 m3 (with 20% margin)
				Retention Time	Batch Operation
				Required volume	724.8 m3

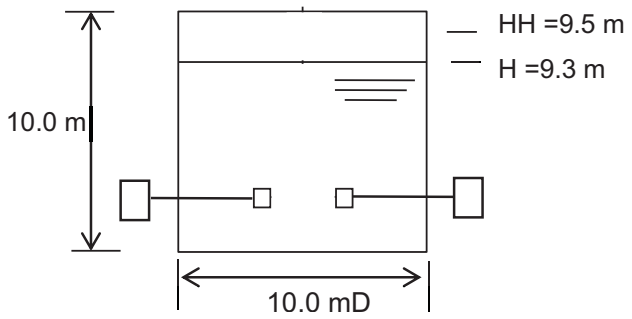

Tank Level is designated to be empty during normal operation. Therefore the volume from bottom to H is considered as effective volume of tank.

Top	10.0
HH	9.5
H	9.3
L	1.2*
LL	1.0*

<u>Circular Tank</u>

Effective volume

= 10.0 m Φ ^ 2 / 4 x π x 9.3 m

= 730.4 m3>724.8 m3

Hold Volume

= 10.0 m Φ ^ 2 / 4 x π x 9.5 m

= 746.13 m3

*L and LL level is finalized by vendor's information of Auxiliary Absorbent tank pump and agitator.

S. No	Item No	Service	Design Spec	Process Parameter	Design Basis
10	10/20HTT 00BB001	Absorber Area Drain Sump	4000mmW X 4000mmL X 4000mmH Quantity = 2 nos. for two Units	Process Capacity for each Sump	25 m3
				Retention Time	Batch Operation
				Required volume	25 m3

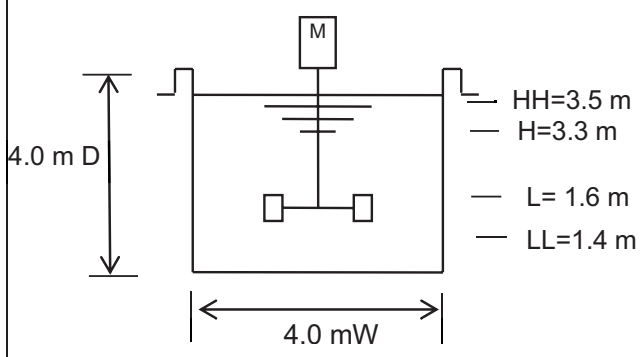

Tank Level is designated as follows

Top	4.0
HH	3.5
H	3.3
L	1.6*
LL	1.4*

<u>Rectangular Tank</u>

Effective volume

= 4.0 m x 4.0 m x (3.3-1.6) m = 27.2 m3 >25 m3

Hold Volume

= 4.0 m x 4.0 m x 3.5 m = 56 m3

*L and LL level is finalized by vendor's information of Sump pump and agitator.

S. No	Item No	Service	Design Spec	Process Parameter	Design Basis
11	00HTT01 BB001	Gypsum Area Drain Sump	4000mmW X 4000mmL X 4000mmH Quantity = 1 no. (Common for two units)	Process Capacity	25 m3
				Retention Time	Batch Operation
				Required volume	25 m3

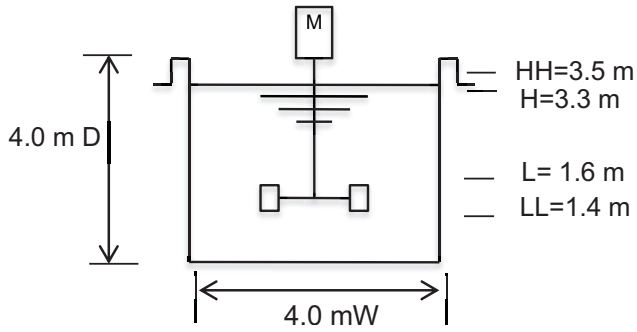

Tank Level is designated as follows

Top	4.0
HH	3.5
H	3.3
L	1.6*
LL	1.4*

<u>Rectangular Tank</u>

Effective volume

= 4.0 m x 4.0 m x (3.3-1.6) m = 27.2 m3 >25 m3

Hold Volume

= 4.0 m x 4.0 m x 3.5 m = 56 m3

*L and LL level is finalized by vendor's information of Sump pump and agitator.

S. No	Item No	Service	Design Spec	Process Parameter	Design Basis
12	00HTT02 BB001	Lime Stone Area Drain Sump	4000mmW X 4000mmL X 4000mmH Quantity = 1 no.(Common for two units)	Process Capacity	25 m3
				Retention Time	Batch Operation
				Required volume	25 m3
	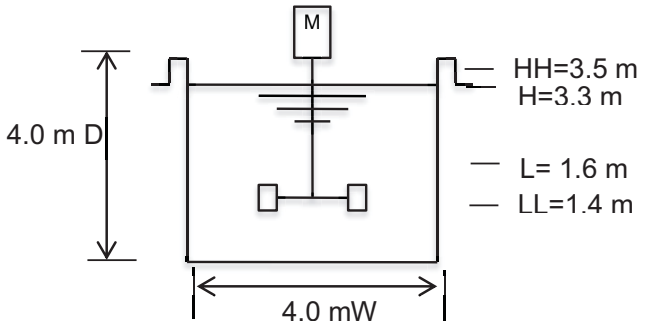				Tank Level is designated as follows Top 4.0 HH 3.5 H 3.3 L 1.6* LL 1.4* **<u>Rectangular Tank</u>** **Effective volume** = 4.0 m x 4.0 m x (3.3-1.6) m = 27.2 m3 >25 m3 **Hold Volume** = 4.0 m x 4.0 m x 3.5 m = 56 m3

*L and LL level is finalized by vendor's information of Sump pump and agitator.

The above data is basic design data and may vary based on actual piping layout and selected vendor's recommendations.

Reference Documents
- Mass Flow Balance (Design Point) data – 9993-109-PVM-W-002

SECTION-I, SUB-SECTION- D

ANNEXURE-IV

MASTER DRAWING LIST WITH SCHEDULE OF SUBMISSION

DRAWINGS/ DOCUMENTS REQUIRED DURING DETAIL ENGINEERING

The successful bidder shall submit the following drawings / documents during detail engineering for approval / information / reference (as the case may be): -

Sl. No.	BHEL Drawing / Document No.	Title	Schedule Date	Drawing Classification
1	PE-V0-468-571-18000-A001	GA drawing, Exploded view, sectional view with Material of construction, mechanical seal , gearbox for all Agitator models	2 weeks from LOI	Primary
2	PE-V0-468-571-18000-A002	Data sheet for all Agitator	2 weeks from LOI	Primary
3	PE-V0-468-571-18000-A003	Agitator Performance curve of all Agitators	2 weeks from LOI	Primary
4	PE-V0-468-571-18000-A004	Electrical motor GA drawing & Data sheet and performance curves of all motors	2 weeks from LOI	Primary
5	PE-V0-468-571-18000-A005	Quality plan & Inspection and Test Procedure	2 weeks from LOI	Primary
6	PE-V0-468-571-18000-A006	Agitator and Motor Sizing Calculation	2 weeks from LOI	Primary
7	PE-V0-468-571-18000-A007	O&M Manual for Agitator	4 weeks from LOI	Secondary
8	PE-V0-468-571-18000-A008	Utility Consumption	4 weeks from LOI	Secondary
9	PE-V0-468-571-18000-A009	Foundation Data including Anchor plan	4 weeks from LOI	Secondary
10	PE-V0-468-571-18000-A010	Lubricating oil list	4 weeks from LOI	Secondary
11	PE-V0-468-571-18000-A011	Special tools list, Start-up & Commissioning Spares	4 weeks from LOI	Secondary
12	PE-V0-468-571-18000-A012	Installation and assembly procedure including Pre Commissioning Check List	4 weeks from LOI	Secondary

NOTE: Drwg/ Document shall be uploaded by the successful bidder on WRENCH /DMS.Procedure for the same will be informed after award of contract.

1. The above drawing list is tentative and shall be finalized with the successful bidder after placement of order. While some of the drawings indicated above may not be applicable, some additional drawings may also be required based on scope of work.
2. Drawings shall be prepared in Auto-Cad latest edition. Required no. of hard and soft copies (editable) of the drawings shall be furnished as per requirement specified elsewhere in the specification.
3. Only manual calculation with authentic supporting literature (e.g. extracts of hand Book/ standard/codes) shall be acceptable. All design calculations and drawings shall be in SI system only.
4. All the drawings and documents including general arrangement drawing, data sheet, calculation etc. to be furnished to the customer during detailed engineering stage shall include / indicate the following details for clarity w.r.t. Inspection, construction, erection and maintenance etc.:

   a) All drawings and documents shall indicate the list of all reference drawings including General Arrangement.

   b) All drawings shall include / show plan, elevation, side view, cross-section, skin section, blow-up view; all major self-manufactured and bought out items shall be labelled and included in BOQ / BOM in tabular form.

   c) Painting schedule shall also be made as a part of general arrangement drawing of each equipment / items indicating at least 3 trade names.

   d) All the drawings required to be furnished to customer during detailed engineering stage shall include technical parameters, details of paints and lubrication, hardness and BOQ / BOM in tabular form indicating all major components including bought out items and their quantity, material of construction indicating its applicable code / standard, weight, make etc.

   e) Void.

   f) Drawings and documents not covered above but required to check safety of machines/ system, shall be submitted during detailed engineering stage without any commercial implication.

   g) All drawings shall include "B.O.M" and indicate quantity, material of construction, make along with IS/BS No., Technical parameters, dimensions, hardness, machining symbol and tolerance, requirement of radiography and hydraulic tests, painting details, elevation, side view, plan, skin section and blow-up view for clarity.

h) All drawings shall be prepared as per BHEL's title block and shall bear BHEL's drawing No. Documents marked for submission to BHEL's Customer shall also bear BHEL's Customer's drawing No.

i) Schedule of drawings submissions, comment incorporations & approval shall be as stipulated in the specifications. The successful bidder shall depute his design personnel to BHEL's/ Customer's/ Consultant's office for across the table resolution of issues and to get documents approved in the stipulated time.

j) Bidder to follow the following the drawing submission schedule:

k) 1st submission of drawings from date of LOI as per the submission schedule.

l) Every revised submission incorporating comments – within 7 days.

m) Bidder to submit revised drawings complete in all respects incorporating all comments.

n) The primary drawings are to be considered as the basic engineering drawings.

Any incomplete drawing submitted shall be treated as non-submission with delays attributable to bidder's account. For any clarification/ discussion required to complete the drawings, the bidder shall depute his personal to BHEL for across the table discussions/ finalizations/ submissions of drawings.

SIGNATURE: _____

COMPANY SEAL

NAME : _____

DESIGNATION: _____

COMPANY: _____

SECTION-I, SUB-SECTION- D

ANNEXURE-V

SEA-WORTHY PACKING PROCEDURE

	TITLE TECHNICAL SPECIFICATION FOR SEAWORTHY PACKING FOR EXPORT JOBS	SPECIFICATION NO. **PE-TS-888-100-A001**
		VOLUME II B
		SECTION D
		REV. NO. 0 DATE 10/08/2010
		SHEET 1 OF 52

1.0 Purpose

The purpose of this specification is to describe minimum packing requirements for the different items/equipment for all export Project and also to define marking and shipping requirements during transportation by ship, road and air for all export jobs.

2.0 **SCOPE**

For export jobs, sea worthy packing capable of performing all necessary functions like prevention of damage to the contents, sufficient to support frequent handling and lengthy period of outdoor storage in adverse weather conditions are required. Workmanship and materials used shall be of high standard meeting the technical requirements and in accordance with best commercial export packing practices. Vendor shall be responsible for sea worthy export packing, however it shall meet the minimum requirements specified herein. Equivalent or better packing methods may be deployed subject to approval of the BHEL/Purchaser. Vendor shall submit the packing procedure for its equivalent for purchaser's approval during detailed engineering.

The scope this specification is to define VENDOR's responsibilities in terms of:

- Preservation of the GOODS/items/equipments before packing.
- Packing of the GOODS for road, rail, sea and/or air transportation to desired destination i.e. project site
- Making cases/crates
- Chemical Treatment/Fumigation before packing to prevent fungus, damage due to termite, borer, rats, etc.
- Marking of cases/crates.
- Other Services required.

3.0 Application

This specification is applicable to all the goods to be transported to project site and requires to be in transit for longer duration. *However, for "Misc cable erection items", "Fire sealing system" & "Exothermic welding material", the packing requirements shall be as per the procurement specification.*

4.0 Definitions

"BHEL" : Main EPC vendor

"OWNER" : Customer for a particular export project.

"VENDOR" : Company(ies)/VENDOR(s) to whom the BHEL has placed Purchase Order for GOODS/ items/system/package.

"GOODS": means all or part of the articles, material, equipment supplies including technical documentation, as described in the Purchase Order, to be supplied by VENDOR.

"PACKER": Packaging Company to whom VENDOR intends to sub-contract the packing in case they do not have own packing capability/facilities .

"FREIGHT FORWARDER" : Means the Company responsible for performing freight forwarding activities.

5. General Information

The following requirements are intended as minimum requirements, and compliance to these requirements in no way absolves or relieves VENDOR of any responsibility or obligation outlined in the Purchase Order. In all circumstances, the packing will be designed and constructed in order to support GOODS during transportation as well as to prevent the Goods from damage due to impact, extreme climatic conditions, sun and rain. It must be ensured that the delivery of the GOODS to the jobsite by sea, road or air, in good condition.

GOODS shall be export packed in compliance with the best-established practices for international projects, in accordance with the following instructions. In the event of any conflict between these specified requirement and the established practices, specification requirement shall govern.

Due to climatic conditions and the complex transport operation(s), it is essential that protection and packing is of the highest standard. Packing means to efficiently protect the GOODS during the total transport operation; from the moment they leave the factory until they are delivered to the jobsite, including handling operations (loading/unloading) and storage.

When VENDOR do not have packing capabilities/facilities of their own and therefore intends to sub-contract, VENDOR have to inform BHEL/Purchaser of the name and address of proposed PACKER(s) for approval.

6.0 Criteria for Selection of Packaging

Packages are to be made according to categories, described in articles 8.1 to 8.5, depending on the type of materials, their fragility and size.

These categories have been established for the protection of equipment and material during multi-mode transports, i.e.: combination of overland and sea transport; containerization, air transportation.

In a general manner, the GOODS have to be packed in such a way that crates, bundles, pallets can be stored into General Purpose containers, wherever possible.

If VENDOR has any doubt about the correct method of protection or packing, he should contact BHEL/Purchaser in order to mutually agree on the adequate type of packing to be used.

Materials can be classified in following categories

- Hazardous Material
- Non-Hazardous Material
-

Further to above categorisation, non-hazardous materials can be sub- categorised for selection of packing.

6.1 Hazardous Materials

Though handling of hazardous material may is not applicable in the scope of this specification. All hazardous material must be packed in adherence to the detailed requirement relating to packing, marking and labelling set out in the most recent report of the Board's Standard Advisory Committee on the Carriage of Dangerous Goods in Ships for sea freight, and the Restricted Articles Regulations, laid down by the International Air Transport Association for airfreight.

6.2 Non-Hazardous GOODS

The scope of this specification is to provide necessary guidelines for packing for power plant equipment, components, Pipings & Valves, Fittings, other structural items, electrical items, spare parts and erection materials. The procedure is defined in subsequent paragraphs in details in clause no. 8.0.

	TITLE	SPECIFICATION NO. **PE-TS-888-100-A001**
	TECHNICAL SPECIFICATION FOR SEAWORTHY PACKING FOR EXPORT JOBS	VOLUME II B
		SECTION D
		REV. NO. 0 DATE 10/08/2010
		SHEET 3 OF 52

7. 0 Marking Instructions & Despatch details, Storage Code

7.1 Marking Instructions & despatch details

Packages and crates will be marked with indelible black paint, resistant to seawater. Marking must be perfectly legible.

The shipping marks, which will be as per fig-13, shall be stencilled on two sides and one end in clear characters at least 5 centimetres high (where crate size permits, otherwise use optimum size for each package dimension).

When the GOODS are to be shipped in containers then marking may be stencilled on one end only. However, packages must be stowed in a manner that shows these marks.

Crates containing fragile articles must be packed with special precaution against risk of breakage and must be stencilled on all sides "FRAGILE - HANDLE WITH CARE". Where crates are not to be overturned, VENDOR must show on the crates, clear and readily visible identification as per fig-12, to ensure they are kept in the correct position.

Packages/equipment of 2,000 kg or more must be marked with slinging points on all sides, in addition to the centre of gravity marks.

Number packages consecutively i.e. 1 of 10, 2 of 10, etc. Do not duplicate package numbers. VENDOR is responsible for any loss or damage caused by incorrect marking.

All cases/crates shall also be marked with the appropriate international standard graphic symbols for handling as shown in Fig 12.

As a minimum, all cases/crates are to be marked clearly on all four sides with:

- "HANDLE WITH CARE"
- "RIGHT SIDE UP"
- **"KEEP DRY"**

In the case of packages with a single gross weight totalling 2,000 kg and/or a height of more than 1m, the centre of gravity shall be clearly marked with the symbol on two adjoining sides.
For all items of equipment with an eccentric centre of gravity this symbol shall be marked at the bottom, side and top of the package.

The slinging and lashing points shall be marked with a chain symbol.

When packing in cases/crates, these packages shall also have metal corners at the slinging points. (Fig-11)

External front and rear sides of the boxes to be planed for writing instructions.

Dispatch details such as consigner/consignee address, contract and case details, country of origin, port of delivery, stacking instructions shall be written on one side of the boxes. An anodized aluminum plate as per details and specifications given in fig-13 shall be provided on one side of the boxes.

One copy of packing slip wrapped in polyethylene bag covered with aluminum packing slip holder to be nailed on the external surface of the box. One more copy of the packing slip wrapped in polyethylene bag is to be kept inside the box at the pertinent place.

7.2 Storage Code

The type of storage required is required to be specified, it will be shown on each packaging in **RED colour.**

X Crates or packages to be stored outdoor without covers
XX Crates or packages to be stored under tarpaulin
XXX Crates or packages to be stored in covered or enclosed premises
XXXX Crates or packages which must be stored in air-conditioned premises

8.0 GUIDELINES FOR PACKING GOODS

8.1 In the subsequent paragraphs details of different types of packings for different types of GOODS are defined. Vendor shall make packing details/procedure based on the guidelines and submit for approval.

8.1.1 Packing for Pipe, Fittings, Flanges and Valves, Structural Steel

Particular attention should be brought to pipe, fittings, flanges, valves and structural steel. Packing categories for piping and fittings will differ according to the diameter and wall thickness of these products. VENDOR shall comply with the following established practice.

IMPORTANT NOTE:
Depending on the project schedule and availability of ocean vessels, the piping and structural steel may be shipped in containers. In this event, VENDOR has to arrange the packages in such a way it allows the stuffing into Open Top in gauge containers.

8.1.2 Pipe

Where practicable, pipe lengths shall be limited to 11.8 meters.
All pipes **2"** included and below shall be packed in crates. All pipes to be capped and ends sealed with waterproof tape.

Pipes over 2" up to 6", shall be bundled and banded in bundles of uniform length. Bundling is carried out with U-IRON or traversal planks, joined with threaded connecting rods with locknuts. Quantities and strapping positions depend on the lengths, with a 120 cm spacing to prevent distortion. Bundle weight shall not exceed 2,000 kg. All pipes are to be capped and ends sealed with waterproof tape (tape is not necessary if end caps are of the pre-shrunk or self-sealing type).

Pipes larger than 6" shall be shipped as single lengths with the ends capped. End caps are to be of the recessed type to enable the use of soft faced hooks, but still completely sealing the end and also protecting the weld.
All stainless steel piping must be packed separately in wooden crates. Any banding of bundles is to be with the same material.

8.1.3 Pipe Fittings, Flanges and Valves

All pipe fittings, flanges and valves up to 6", are to be packed in cases/crates. For items over 6", these may be fixed securely to a pallet base and enclosed in a crate, for protection. Where valves have actuators attached, rigidity must be ensured for the valve and actuator. The vulnerable parts of the actuator are to be completely protected within a wooden crate.

All stainless steel fittings, flanges and valves of all sizes, must be packed separately in wooden crates. Any strapping is to be with the same material.

8.1.4 Structural Steel

Structural Steel, reinforcing rods, bars, etc., should be packed in bundles of uniform length. Refer to articles 8.1.2, for strapping requirements. Bundle weight not normally to exceed 2,000 kg. Fabricated structures and structural steelwork, etc, should be bundled and packed using wooden beams and long bolting to secure the load.

8.2 Bundling – Packing Category I

8.2.1 Type of Equipment

Equipment which is not subject to damage by corrosion or mechanical effect, i.e. pipes, piping, structural steel.

Packing category I

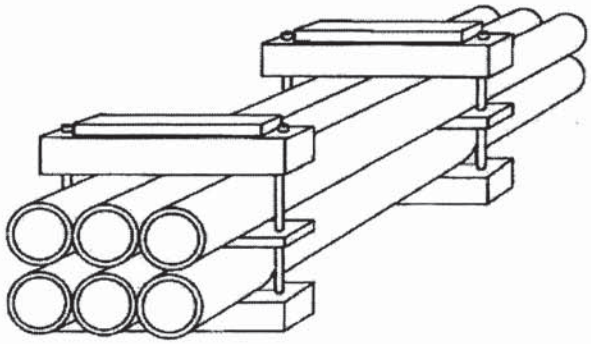

Bundling by U-shaped iron – packing category I A

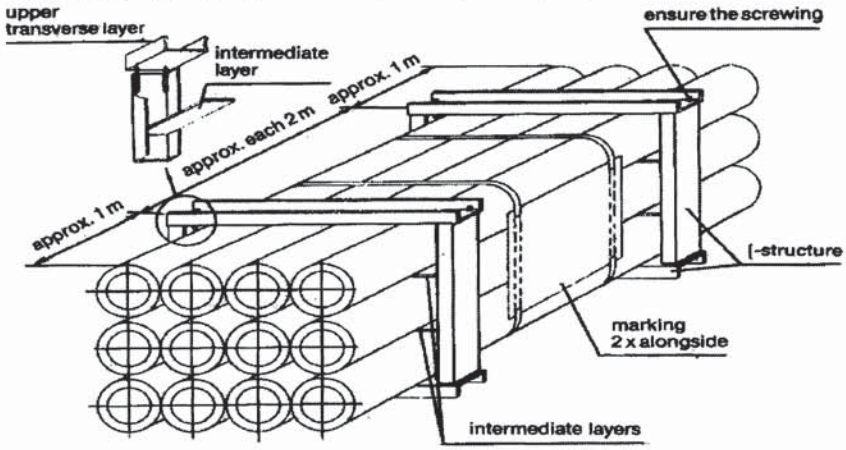

8.2.2 Type of Construction

	TITLE TECHNICAL SPECIFICATION FOR SEAWORTHY PACKING FOR EXPORT JOBS	SPECIFICATION NO. **PE-TS-888-100-A001**
		VOLUME II B
		SECTION D
		REV. NO. 0 DATE 10/08/2010
		SHEET 6 OF 52

Bundling has to be effected

- By squared timber and threaded rods.
- With an intermediate layer (threaded on tightening bolts) according to the weight of the package.
- Wedge-shaped timbers must be added at the outer points of lower layer.
- Between the bolts a spacer must be nailed.
- The bolts must be secured (e.g. by locking nut).
- If single parts could protrude, an appropriate protection must be installed (flat iron or plates).
- Bundling with steel straps or PVC straps is not accepted.

8.3 Skids, Square Timber Constructions, Casings – Packing (Category II)

8.3.1 Type of Equipment

Voluminous apparatus, tanks and/or heavy pieces those are not vulnerable to mechanical or corrosive effects.

8.3.2 Type of Construction

- The construction skid can be made of wood or of metal.
- The fastening of the packages on the skid will be made by steel straps (flat iron) which have to be elastically lined, non-slip and securely bolted onto the skids.
- Flange openings have to be closed with gaskets and blind flanges or, if necessary, provided with cover.
- Skid constructions may not be less than the dimensions of the package in length or in width.
- Tanks and apparatus with their own support cradles must be supplied with an anti-slip lining.

PACKING CATEGORY-II

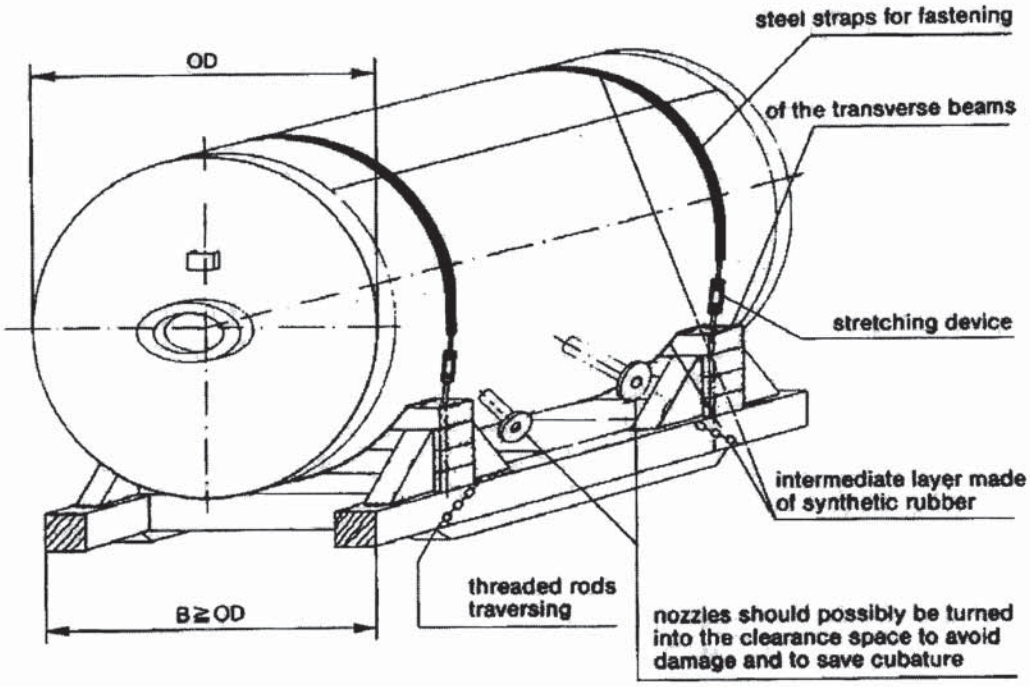

	TITLE TECHNICAL SPECIFICATION FOR SEAWORTHY PACKING FOR EXPORT JOBS	SPECIFICATION NO. **PE-TS-888-100-A001**
		VOLUME II B
		SECTION D
		REV. NO. 0 DATE 10/08/2010
		SHEET 7 OF 52

8.4 Packing of GOODS in Wooden Crates/Cases/Boxes

The construction of wooden crate/cases/boxes shall be as per the details indicated in clause 9.0 & Fig 1 to 11. Details indicated in the sketches for different categories Packing crates/boxes are only for a typical equipment considered for illustration.

8.4.1 Packing Category III

8.4.1.1 Type of Equipment

Fabricated equipment, which cannot be transported on cradles; frame-works, prefabricated piping and fittings, mechanical and electrical assemblies. *This type of packing is recommended where many parts of the equipment/component/assembly are not protruding out.*

8.4.1.2 Type of Construction

The equipment must be safely fastened to the bottom with bolts, possibly by the runners or to be spread in such a manner that no protruding parts are possible. For parts, sensitive to rainwater and/or debris, a protection has to be made by a foil cap.

If it is possible that single part could protrude through the front/back side wall, they shall be closed completely. The marking of the package shall be done on plywood plates at the prescribed sides.

Packing Category III

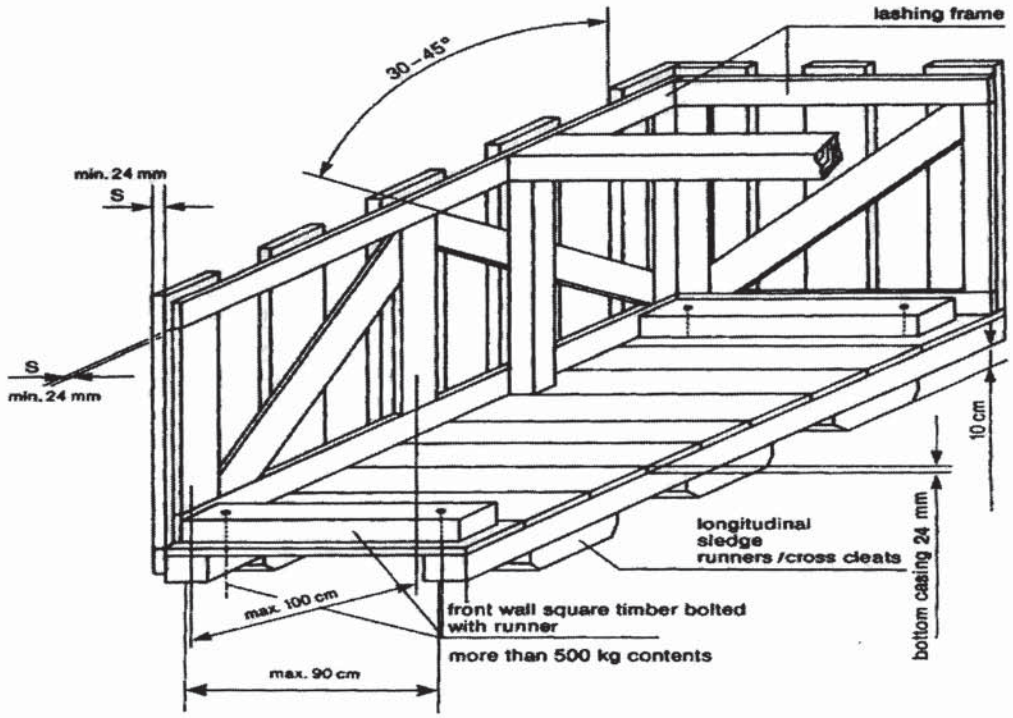

	TITLE TECHNICAL SPECIFICATION FOR SEAWORTHY PACKING FOR EXPORT JOBS	SPECIFICATION NO. **PE-TS-888-100-A001**
		VOLUME II B
		SECTION D
		REV. NO. 0 DATE 10/08/2010
		SHEET 8 OF 52

8.4.2 Cases with Lining – Packing Category IV

8.4.2.1 Type of Equipment

Recommended for equipment and mechanical parts Equipment sensitive to mechanical damage or parts and components that are particularly at risk of theft or loss; pumps, elbows, flanges, fittings, tools, erection materials, etc.

8.4.2.2 Type of Construction

The same type of construction as article 8.4.1.2, but with all sides completely boarded without space between the boards. Sides to be provided with waterproof lining; fabric-reinforced waterproof tar paper or polyethylene-foils resistant to ultraviolet rays can be used. Polyethylene-foil shall be fixed under the lid cover to avoid penetration of water. At weights of more than 500 kg the longitudinal runner must be bolted to the front all square timber. For ventilation inside the case, an opening in the waterproof lining must be placed between the diagonal battens and diagonal joists.

Packing Category IV

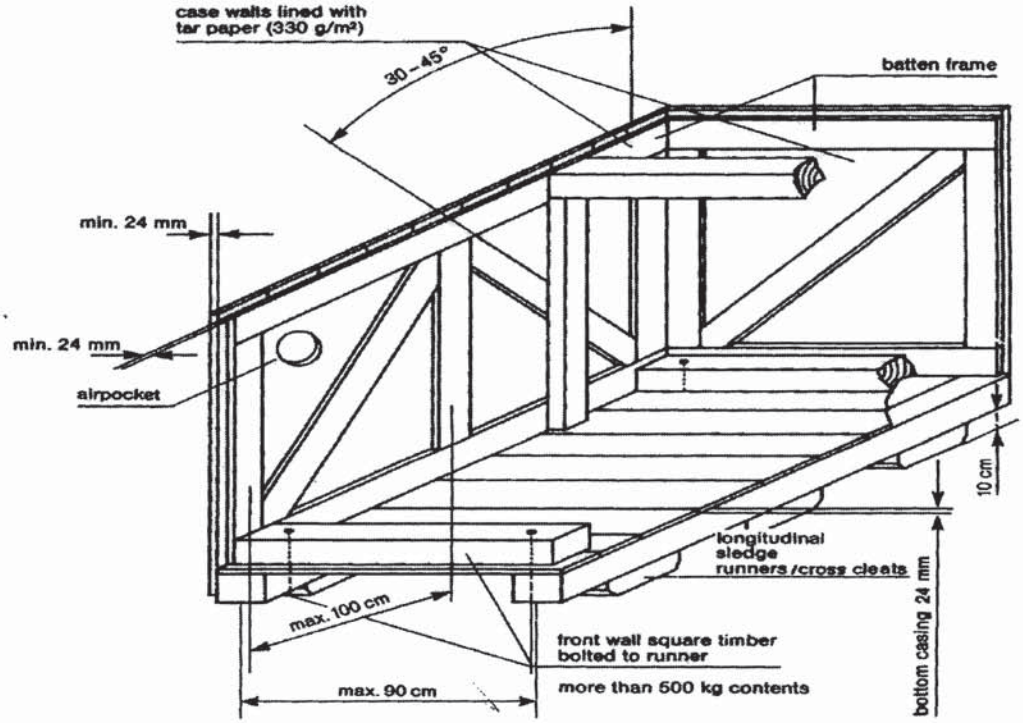

8.4.3 Cases with Alternative Surface Materials

8.4.3.1 Plywood Box – Packing Category IV A

	TITLE TECHNICAL SPECIFICATION FOR SEAWORTHY PACKING FOR EXPORT JOBS	SPECIFICATION NO. **PE-TS-888-100-A001**
		VOLUME II B
		SECTION D
		REV. NO. 0 DATE 10/08/2010
		SHEET 9 OF 52

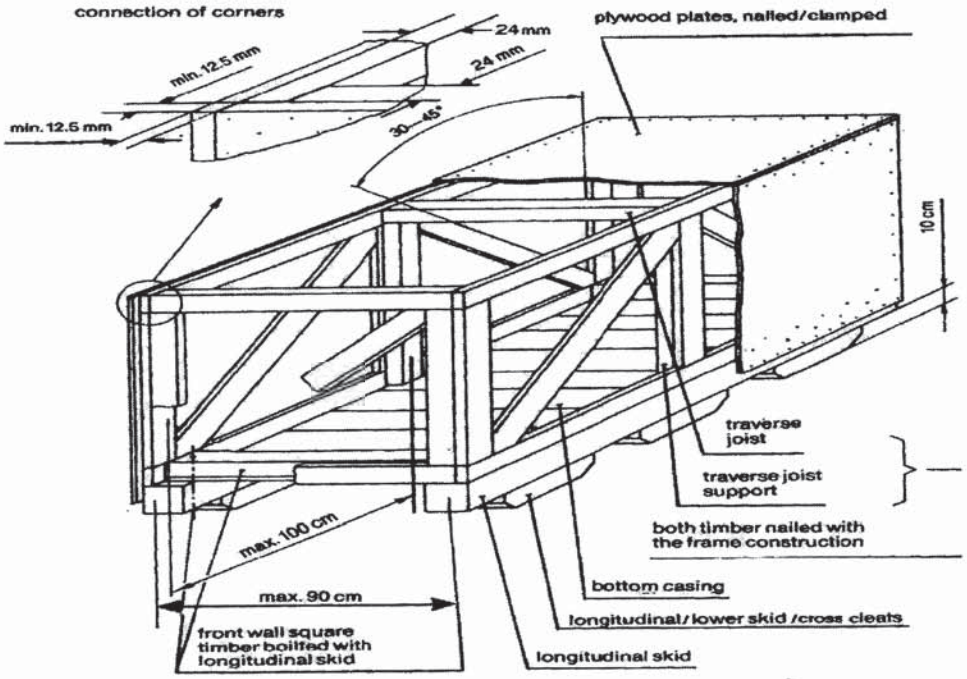

Case constructed of 5 layers of watertight, glued plywood with a total thickness of 12.5 mm. The frame must be constructed from minimum 24 mm timber or as per guide lines given above against clause 8.0, Fig 1 to 11 and must be suitable for the weight and nature of the parts to be packed. Planed square timber must be bolted with longitudinal skid and covered with diagonal joists. If applicable, construction of the cover and sides is to include diagonal bracing. Covers consisting of several layers of plywood are to be sealed with durable elastic putty or additional water-resistant sheets to be fixed.

8.4.4 Case with Barrier Material – Polyethylene Foil – Packing Category V

8.4.4.1 Type of Equipment

Sensitive equipment, simple electrical equipment, insulation materials, fire-resistant materials, with non-corrosion- guarantee for a period up to twelve (12) months.

8.4.4.2 Type of Construction

Preservation by welding in polyethylene-foil with addition of desiccants and if necessary, application of non-corrosive contact agents, otherwise, type of construction as indicated in article 8.4.2.2.
Additional marking:

- Case with desiccants.

8.4.5 Case with Barrier Material – Aluminium Compound Foil – Packing Category VI

8.4.5.1 Type of Equipment

Electrical equipment such as, switchboards, electric motors, sensitive equipment, with non-corrosion guarantee, for a period up to twelve (12) months.

8.4.5.2 Type of Construction

Type of construction as indicated in article 8.4.2.2. Preservation by sealing an aluminium compound foil, with the addition of desiccants. Humidity indicators, if required and installed in the barrier wrapping, shall allow easy control from the outside.

Additional marking:

- Case with desiccants.

Packing Category V/VI

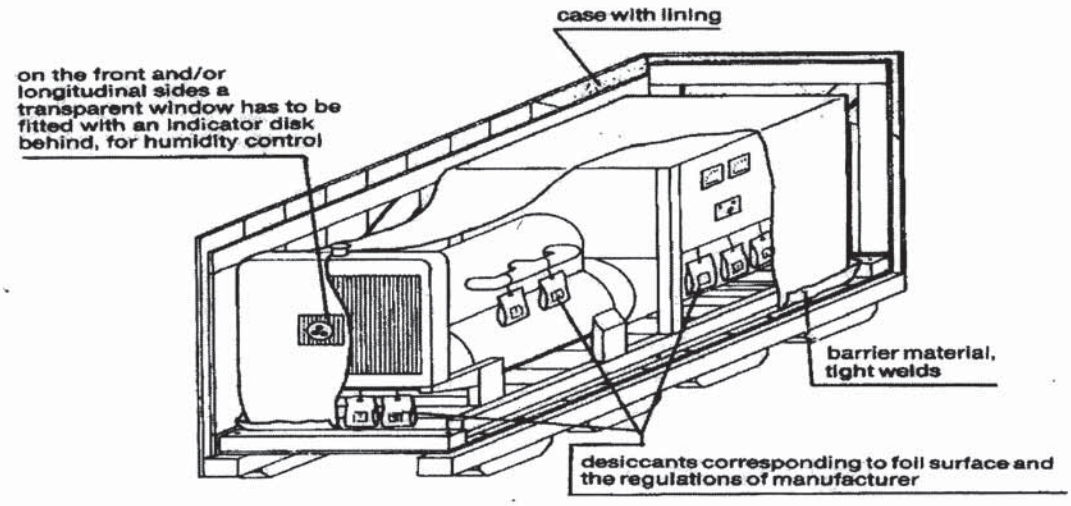

8.4.6 Double Case – Packing Category VII

8.4.6.1 Type of Equipment

GOODS which are of high sensitivity to shock, impact and vibration, for instance, special electrical equipment like computers, switchboards, laboratory instruments

8.4.6.2 Type of Construction

Case construction as indicated in article 8.4.2.2, with additional floating inner packing (case-in-case principle), padding corresponding to weight and sensitiveness. Preservation by sealing in aluminium compound foil with the addition of desiccants. The inner case has to be made of plywood or equivalent material with a thickness of 8-12 mm, depending on the weight of the GOODS to be packed. The inner buckles and/or frame borders have to be dimensioned so that the full stability of the inside case will be reached and no twisting is possible. The inner sides of the inside case will be lined with bituminous kraft paper on all sides (except bottom).

8.4.7 Cable Drum – Packing Category VIII

8.4.7.1 Type of Equipment

All type of cables, wires, ropes, hoses.

8.4.7.2 Type of Construction

For all type of cables refer clause no. 11.1. For other items (wires, ropes, hoses) new or practically new drums are to be used. Planking of the e drums by use of boards, thickness minimum 20 mm, with additional double steel strapping, nailed, and carefully preserved/ protected cable ends prior to packing.

8.4.8 Hazardous Materials – Packing Category IX

8.4.8.1 Type of Equipment

Hazardous materials according to the law are explosives, compressed gases, liquefied gases dissolved under pressure or deeply refrigerated, flammable liquids, flammable solids: substances liable to spontaneous combustion; substances which, on contact with water, emit flammable gases, oxidizing substances, organic peroxides, poisonous (toxic) and infectious substances; radioactive materials, corrosives, miscellaneous dangerous goods.

8.4.8.2 Type of Construction

Hazardous materials shall always be packed and documented separately from any other material. Selection of packaging materials, execution of packing and marking as well as documentation shall always be in compliance with the applicable laws and regulations. Any certificates required for transportation or for authorities to be supplied before shipment of the GOODS.

8.4.9 Wooden Floor as a Transport Support – Packing Category X

8.4.9.1 Type of Equipment

Any materials to be stuffed in containers or on flat racks and that are not stowed on standard pallets or otherwise suitably packed

8.4.9.2 Type of Construction

- Longitudinal internal square timbers bolted to the front wall runners, longitudinal skid.
- Maximum distance between longitudinal runners 90 cm (middle to middle of the runner).
- Full boarding of the floor.
- Attaching of lifting lugs and/or iron ropes for lifting/pulling the units off the transport equipment.
- If applicable, preservation of the equipment by sealing in polyethylene-foil or aluminium compound foil and the addition of desiccants.

8.5 Air Transport Packing

8.5.1 General

Certain types of material may have to be shipped by air from their country of origin. This means of transport will be exceptional, and will be used only:

- For GOODS, which are highly sensitive to shock or vibrations, such as computers, electronic instruments, or those of small dimensions and weight.
- For GOODS urgently required at the module yard(s) and/or jobsite.

8.5.2 Type of Packing

Depending on the goods to be packed, VENDOR may use one of the following types:

- A triple-corrugated cardboard container made with waterproofed glue and a barrier layer of polyethylene on the outsides to keep out humidity.
- Wooden/cardboard packing cases: the wood being used for the framework and base of the cases, waterproofed triple-corrugated cardboard being used for the sides and top. These cases are of the "Bell" type, and used for material of small or medium dimensions.
- For larger dimensions, plywood cases are acceptable. The timber characteristics, cross-sections and thickness will be systematically determined by the nature of the loads to be packed.

8.5.3 Dimensions

In order to optimize the existing transport facilities (passenger or cargo aircraft), the dimensions of:

- Triple-corrugated containers.
- Wooden/cardboard packing cases.
- Plywood cases.

Are to be adapted to pallets used for air transportation.

9.0 <u>Detailed specification for Wooden Crates/Boxes/Cases and other packing materials</u>

9.1 **Technical specification for wood**

The wood shall be Fir, Chir, Silver Oak (Gravillea Robusta), chemically treated mango and Pinewood with moisture content not exceeding 50%. The wood shall have flexural and compressive strength, stiffness, shock absorption and nail retention properties. The wood shall be free from common defects such as warp, bone, twist, knot, crakes, splits, end splits, bend, visible sign of infection and any kind of decay caused by insects or fungus, etc. Surface cracks with maximum depth of 3mm are permissible. A continuous crack of any depth all along the length is not allowed.

9.2 **Chemical Treatment of Wood**:

The wood shall be chemically treated to provide protection against deterioration due to fungi and attack by termites, borers, marine organism and any other kind of infection. It shall be treated only after final processing like cutting, planning, joint grooving, etc.

9.3 **TYPE, DESIGN & DIMENSION OF WOODEN PACKING CASES**:

9.3.1 **PACKING OF EQUIPMENTS**

Various mechanical, electrical and C&I equipment e.g. Pumps, motors, equipment skids, heat exchangers, control panels, switch gears, transformers, etc. shall be wrapped in weather proof packing and then secured in wooden packing cases. The construction of wooden packing cases/crates shall be as per details given below and also given in figure 1 to 11.

9.3.1.1 **Bottom Frame**

The construction of bottom frame shall be as per Fig-2. The No. of slides/runners for bottom frames shall be selected depending upon the weight and overall dimensions of the load to be carried. The equipment shall be secured by fixing their base frame/plate with the help of bolt and nuts etc. to bottom frame of the wooden packing cases/crates. The equipment not provided with base frame/plate like cylindrical vessels, etc to be secured to the bottom frame of the wooden cases with "C" clamps fabricated from steel channels/ angle iron.

9.3.1.2 **TOP FRAME**

The construction of top frame shall be as per fig-3.

9.3.1.3 **END PANELS**

The dimension of the end and lateral panels shall be calculated according to overall dimensions of the items to be packed. Diagonal braces shall be used for packing cases having height exceeding 500mm. Details of bracings shall be as per fig 5 to 9.

9.3.1.4 **Sling Plate**

To facilitate lifting of cases, longitudinal under slide boards shall be fixed. To avoid damage to the box while lifting sling plates shall be provided. Refer fig-11.

9.3.1.5 **Angle Iron Cleats**

Angle iron cleats shall be used for strengthening the joints as indicated in fig-10

9.3.1.6 **Other Requirements**

- The thickness of planks for top, bottom, side and end panels shall be at least 25mm. Planks used for this purpose shall be joined with each other by tongue and groove joint. The groove dimension shall be such that tongue fits tightly into groove to make the joint.
- Runners/slides, traverse bars, etc shall be of single length I.e. without any joint. Planks for sheathing, diagonal bracing etc shall also be of single length up to 2400mm, proper jointing is permitted for planks for sheathing and diagonal bracings.
- Each equipment to be individually covered with double polyethylene petticoat. Sheet thickness of polythene sheet shall not be less than 0.175 mm (175 microns). The sealing shall be such so as not to allow moisture inside.
- The inner surface of 4 sides of shooks shall be nailed with bituminized water proof craft paper. Wherever 2 pieces of kraft paper are used, joint shall have an overlap of minimum 20 mm.
- All the inner sides of the box shall be nailed with bitumen coated HESSIAN POLYTHYLENE KRAFT PAPER. For top frame it shall project on all sides by 100mm and shall be nailed on sides. Wherever 2 pieces of kraft paper are used, joint shall have an overlap of minimum 20 mm.
- For delicate equipment like control panels and switchgears, lighting panels and lighting transformers, suitable cushioning material like rubberised coir (min. 50 mm thick and 100 mm wide) shall be provided on their bottom support and the gap between the panel and casing

shall be filled with rubberized coir with distance between consecutive supports less than 500 mm (ref fig15). For other equipment suitable support from sides of the casing shall be provided.

- Switchgear cubicles, control panels and control desks shall be packed and shipped in separate convenient sections. The components e.g. circuit breakers relays and instruments etc. which are removed from panels for shipping purpose and shall be separately packed and shipped as per packing instructions in clause 10.4.

- Packing case for control panels and switchgear panels shall be finally covered with GI sheet of minimum thickness of 0.4mm.

- Packing cases shall be bound at edges by nailing MS clamps/brackets at sufficient intervals. Further heavier boxes shall be strapped with C clamps (ref fig-4) fabricated from steel channels/angles and lighter boxes shall be strapped with hoop iron strips.

- Silica gel is used for this purpose to protect contents over sufficiently long time from corrosion. Silica gel shall be indicating type confirming to IS-304 (1979) packed in cotton bags placed at different positions inside the packing for absorbing moisture and shall not come into directly contact with equipment/material inside the package. The quantity of silica gel shall be adequate for storage period of one year, however it shall not be less than 4 gm. per ltr. Volume of case subject to minimum 400 gm. Per case.

	TITLE	SPECIFICATION NO. PE-TS-888-100-A001
	TECHNICAL SPECIFICATION FOR SEAWORTHY PACKING FOR EXPORT JOBS	VOLUME II B
		SECTION D
		REV. NO. 0 DATE 10/08/2010
		SHEET 15 OF 52

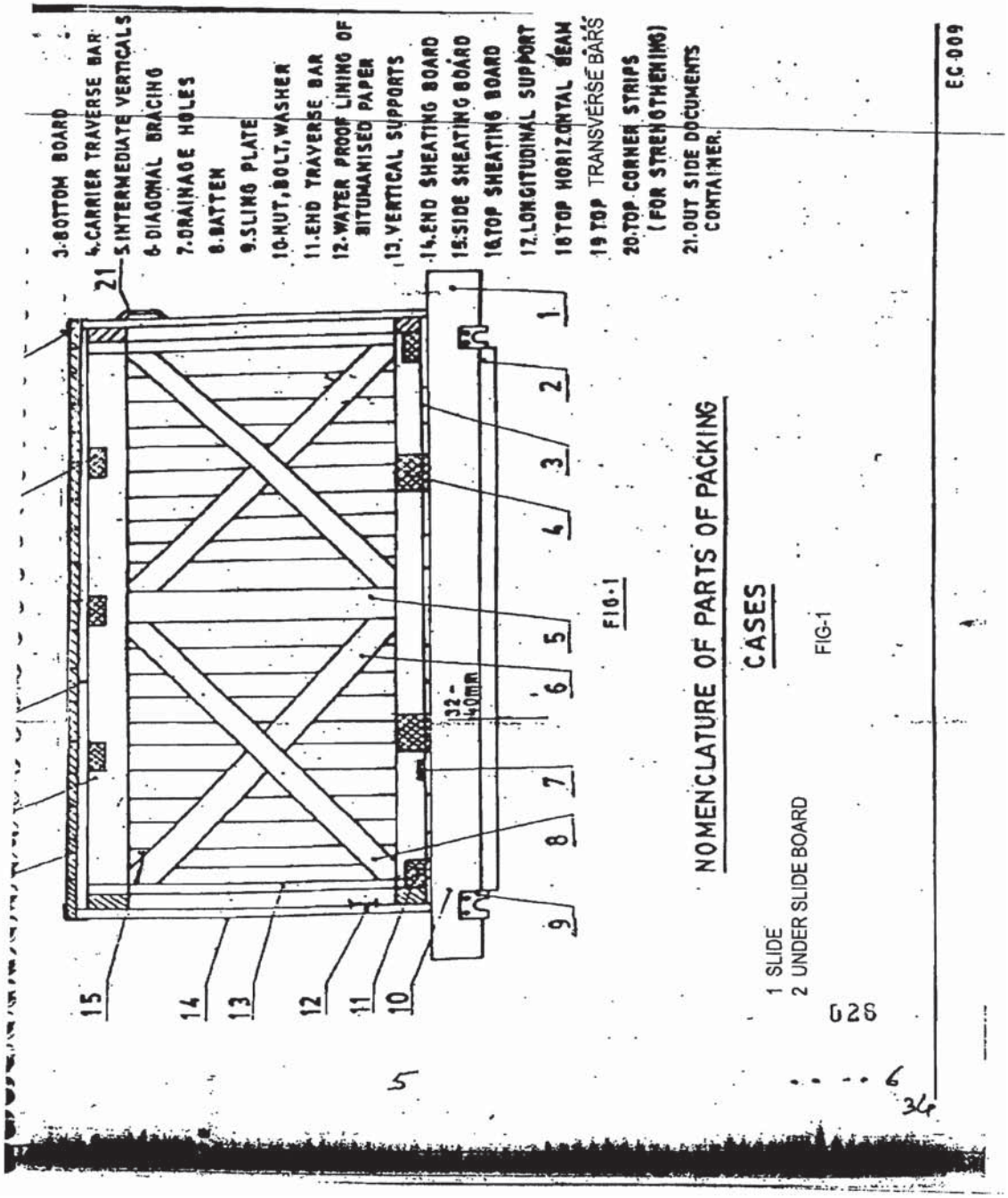

	TITLE	SPECIFICATION NO. PE-TS-888-100-A001
	TECHNICAL SPECIFICATION FOR SEAWORTHY PACKING FOR EXPORT JOBS	VOLUME II B
		SECTION D
		REV. NO. 0 DATE 10/08/2010
		SHEET 16 OF 52

BOTTOM FRAME ARRANGEMENTS

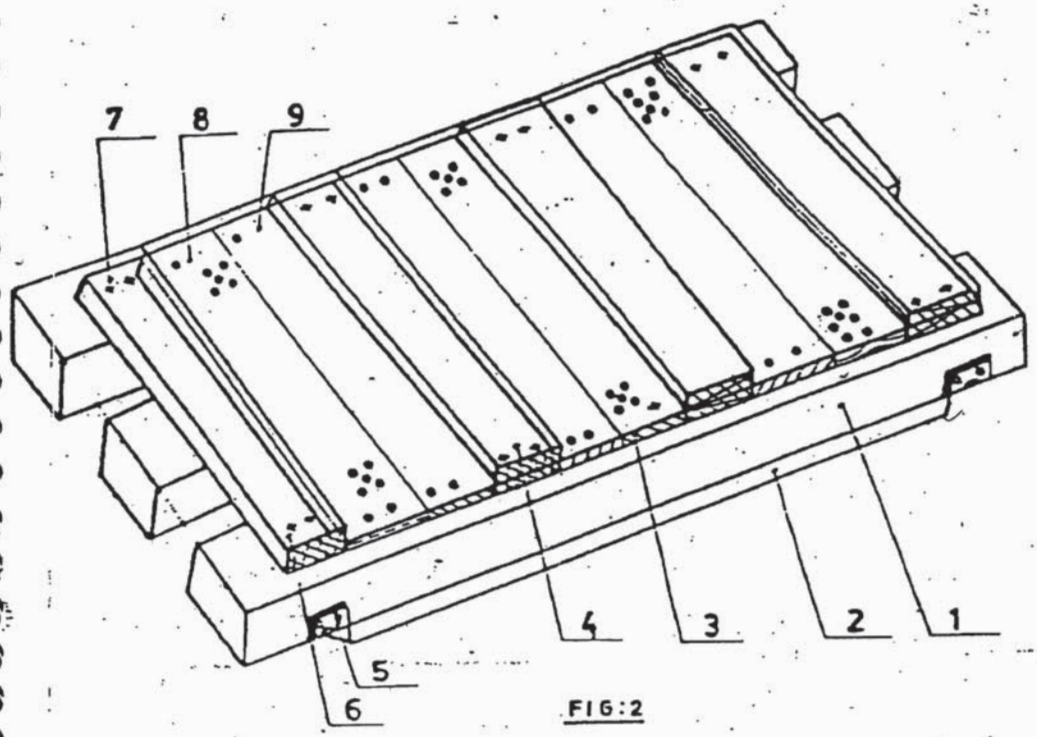

FIG:2

Nos. of slides : Minimum 2 Nos.
For length more than 1800 mm or load more than 1000kg, Nos. of slides shall be minimum 3 Nos.
For dimensions of slides, refer Table 1
Cross section of end traverse bar; 100 x 100 mm (minimum)

1. SLIDE
2. UNDER SLIDE BOARD
3. BOTTOM BOARD
4. CARRIER TAVERSE BAR
5. SLING PLATE
6. END TRAVERSE BAR
7. BOLT, NUT & WASHER
8. DRAINAGE HOLES
9. NAILS

027

6

7

	TITLE	SPECIFICATION NO. PE-TS-888-100-A001
	TECHNICAL SPECIFICATION FOR SEAWORTHY PACKING FOR EXPORT JOBS	VOLUME II B
		SECTION D
		REV. NO. 0 DATE 10/08/2010
		SHEET 17 OF 52

TOP FRAME ARRANGEMENT

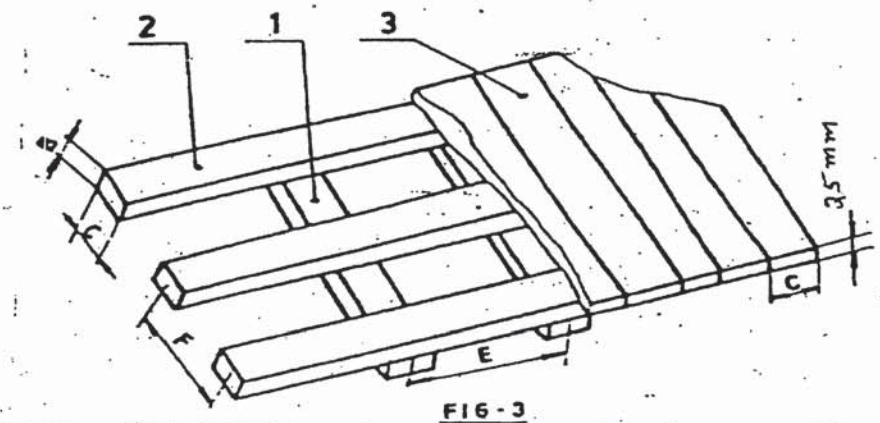

FIG-3

F : 700 t. 1000 mm
E : 500 t 900 mm
: 30×100 mm.

1 - Treverse Bars
2 - Horizontal Beams
3 - Top Board

ARRANGEMENT OF C-CLAMPS AROUND CASES

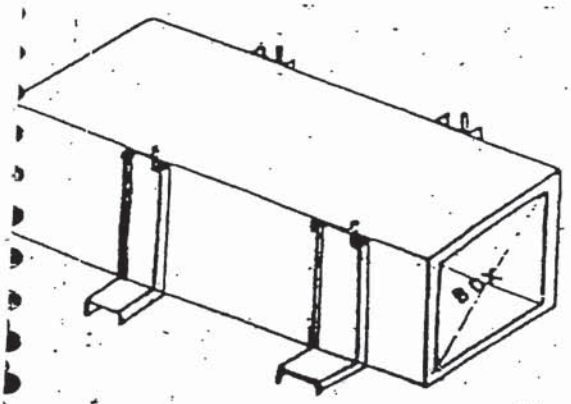

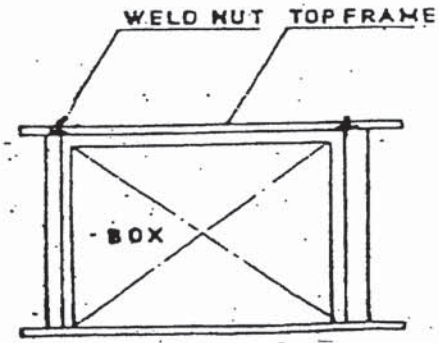

028

	TITLE	SPECIFICATION NO. PE-TS-888-100-A001
	TECHNICAL SPECIFICATION FOR SEAWORTHY PACKING FOR EXPORT JOBS	VOLUME II B
		SECTION D
		REV. NO. 0 DATE 10/08/2010
		SHEET 18 OF 52

ARRANGEMENT OF DIAGONAL BRACING AND HORIZONTAL SUPPORT

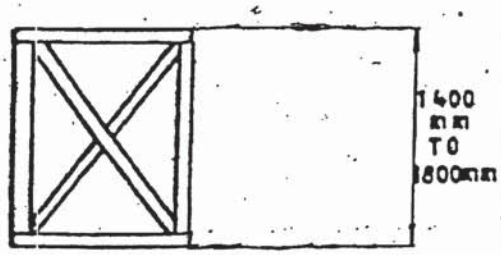

FIG:6

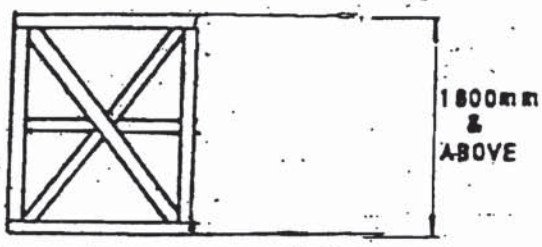

FIG:8

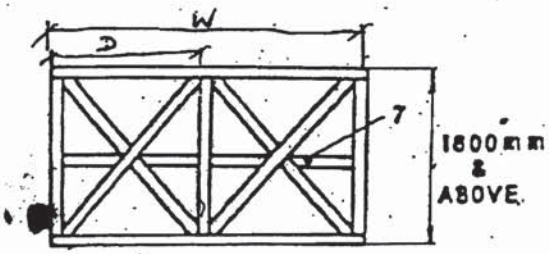

FIG:9

7- Middle Horizontal Support

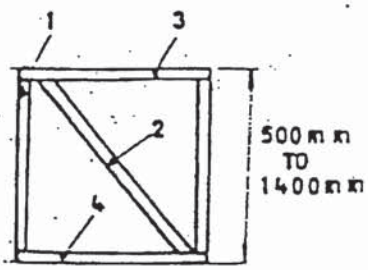

FIG:5

1- Vertical Support

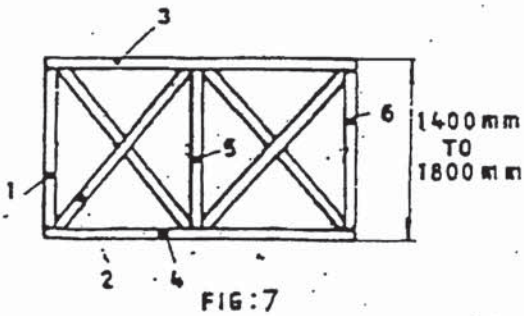

FIG:7

1, 5, 6 - Vertical Support

029

	TITLE	SPECIFICATION NO. PE-TS-888-100-A001
	TECHNICAL SPECIFICATION FOR SEAWORTHY PACKING FOR EXPORT JOBS	VOLUME II B
		SECTION D
		REV. NO. 0 DATE 10/08/2010
		SHEET 19 OF 52

ARRANGEMENT OF PACKING CASE

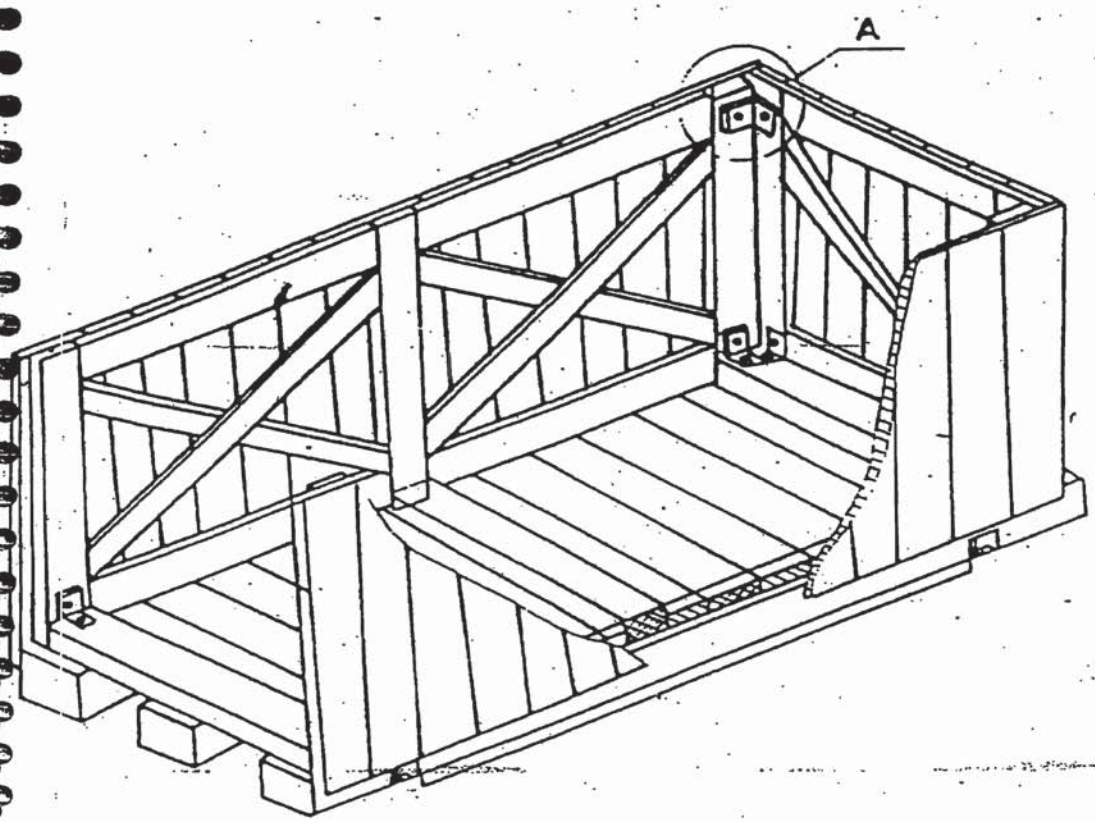

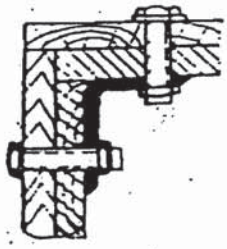

DETAIL-A

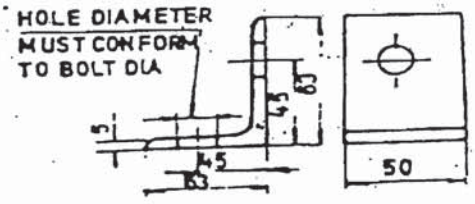

FIG:10

030

	TITLE	SPECIFICATION NO. PE-TS-888-100-A001
	TECHNICAL SPECIFICATION FOR SEAWORTHY PACKING FOR EXPORT JOBS	VOLUME II B
		SECTION D
		REV. NO. 0 DATE 10/08/2010
		SHEET 20 OF 52

ARRANGEMENT OF SLING + PLATE ON CASES

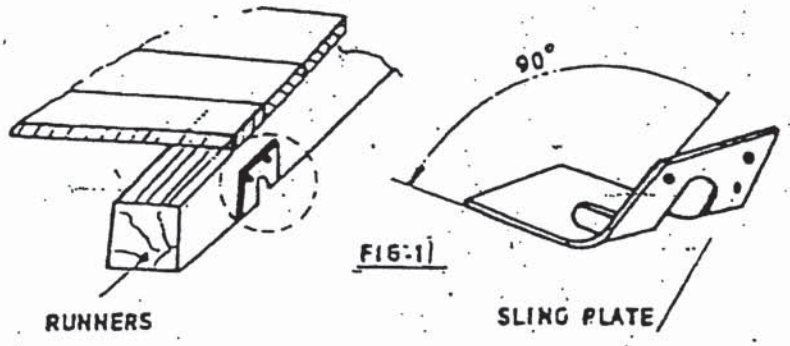

FIG:1

031

	TITLE TECHNICAL SPECIFICATION FOR SEAWORTHY PACKING FOR EXPORT JOBS	SPECIFICATION NO. **PE-TS-888-100-A001**
		VOLUME II B
		SECTION D
		REV. NO. 0 DATE 10/08/2010
		SHEET 21 OF 52

TABLE-1

LOADS	LENGTHS OF SLIDES						
	600	800	1000	1200	1300	1500	2000
	Cross section b x c				c b		
500	50 X 100	50 X 100	50 X 100	50 X 100	75 X 100	75 X 100	100 X 100
800	50 X 100	50 X 100	75 X 100	75 X 100	75 X 100	75 X 100	100 X 100
1000	75 X 100	75 X 100	75 X 100	100 X 100	100 X 100	100 X 110	100 X 150
1500	75 X 100	75 X 100	100 X 100	100 X 100	100 X 100	100 X 150	100 X 150
2000	75 X 100	100 X 100	100 X 100	100 X 150	100 X 150	100 X 150	150 X 150
2500	75 X 100	100 X 100	100 X 150	100 X 150	100 X 150	150 X 150	150 X 150
3000	100 X 100	100 X 150	150 X 150	150 X 150	150 X 150	150 X 150	150 X 150

	TITLE TECHNICAL SPECIFICATION FOR SEAWORTHY PACKING FOR EXPORT JOBS	SPECIFICATION NO. **PE-TS-888-100-A001**
		VOLUME II B
		SECTION D
		REV. NO. 0 DATE 10/08/2010
		SHEET 22 OF 52

Table-2

End and side panels	Width of the panel "W"	Distance between longitudinal support (Dimension "D")						
		600	800	1000	1200	1400	1600	1800
		Cross section b x c				Item 1 to 7		
Fig- 5 to Fig-9	600 to 1200	30 X 100	30 X 100	30 X 100	30 X 130	30 X 130	30 X 130	30 X 130
	1201 to 1600	30 X 130	30 X 130	30 X 130	30 X 130	30 X 130	30 X 130	30 X 130
	1601 to 2000	30 X 130	30 X 130	30 X 130	30 X 130	30 X 130	30 X 130	30 X 130
	2001 to 3000	30 X 130	30 X 130	30 X 130	30 X 130	30 X 130	30 X 130	40 X 150
	3001 to 4000	40 X 150	40 X 150	40 X 150	40 X 150	40 X 150	40 X 150	40 X 150

	TITLE TECHNICAL SPECIFICATION FOR SEAWORTHY PACKING FOR EXPORT JOBS	SPECIFICATION NO. **PE-TS-888-100-A001**
		VOLUME II B
		SECTION D
		REV. NO. 0 DATE 10/08/2010
		SHEET 23 OF 52

INDICATION MARKS ON CASES/BOXES/CRATES

Designation	Symbol	Explanation
Fragile, Handle with care		The symbol should be applied to easily broken cargoes. Cargoes marked with this symbol should be handled carefully and should never be tipped over or slung.
Use no hooks		Any other kind of point load should also be avoided with cargoes marked with this symbol. The symbol does not automatically prohibit the use of the plate hooks used for handling bagged cargo.
Top		The package must always be transported, handled and stored in such a way that the arrows always point upwards. Rolling, swinging, severe tipping or tumbling or other such handling must be avoided.
Keep away from heat (solar radiation)		Compliance with the symbol is best achieved if the cargo is kept under the coolest possible conditions. In any event, it must be kept away from additional sources of heat. It may be appropriate to enquire whether prevailing or anticipated temperatures may be harmful.
Protect from heat and radioactive sources		Stowage as for the preceding symbol. The cargo must additionally be protected from radioactivity.
Sling here		The symbol indicates merely where the cargo should be slung, but not the method of lifting. If the symbols are applied equidistant from the middle or center of gravity, the package will hang level if the slings are of identical length. If this is not the case, the slinging equipment must be shortened on one side.
Keep dry		Cargo bearing this symbol must be protected from excessive humidity and must accordingly be stored under cover. If particularly large or bulky packages cannot be stored in warehouses or sheds, they must be carefully covered with tarpaulins.

	TITLE TECHNICAL SPECIFICATION FOR SEAWORTHY PACKING FOR EXPORT JOBS	SPECIFICATION NO. **PE-TS-888-100-A001**
		VOLUME II B
		SECTION D
		REV. NO. 0 DATE 10/08/2010
		SHEET 24 OF 52

Center of gravity		This symbol is intended to provide a clear indication of the position of the center of gravity. To be meaningful, this symbol should only be used where the center of gravity is not central. The meaning is unambiguous if the symbol is applied onto two upright surfaces at right angles to each other.
No hand truck here		The absence of this symbol on packages amounts to permission to use a hand truck on them.
Stacking limitation		The maximum stacking load must be stated as "... kg max.". Since such marking is sensible only on packages with little loading capacity, cargo bearing this symbol should be stowed in the uppermost layer.
Clamp here		Stating that the package may be clamped at the indicated point is logically equivalent to a prohibition of clamping anywhere else.
Temperature limitations		According to regulations, the symbol should either be provided with the suffix "...°C" for a specific temperature or, in the case of a temperature range, with an upper ("...°C max.") and lower ("...°C min.") temperature limit. The corresponding temperatures or temperature limits should also be noted on the consignment note.
Do not use forklift truck here		This symbol should only be applied to the sides where the forklift truck cannot be used. Absence of the symbol on other sides of the package amounts to permission to use forklift trucks on these sides.
Electrostatic sensitive device		Contact with packages bearing this symbol should be avoided at low levels of relative humidity, especially if insulating footwear is being worn or the ground/floor is nonconductive. Low levels of relative humidity must in particular be expected on hot, dry summer days and very cold winter days.

	TITLE TECHNICAL SPECIFICATION FOR SEAWORTHY PACKING FOR EXPORT JOBS	SPECIFICATION NO. **PE-TS-888-100-A001**
		VOLUME II B
		SECTION D
		REV. NO. 0 DATE 10/08/2010
		SHEET 25 OF 52

Do not destroy barrier		A barrier layer which is (virtually) impermeable to water vapor and contains desiccants for corrosion protection is located beneath the outer packaging. This protection will be ineffective if the barrier layer is damaged. Since the symbol has not yet been approved by the ISO, puncturing of the outer shell must in particular be avoided for any packages bearing the words "Packed with desiccants".
Tear off here		This symbol is intended only for the receiver.

FIG-12

	TITLE	SPECIFICATION NO. **PE-TS-888-100-A001**
	TECHNICAL SPECIFICATION FOR SEAWORTHY PACKING FOR EXPORT JOBS	VOLUME II B
		SECTION D
		REV. NO. 0 DATE 10/08/2010
		SHEET 26 OF 52

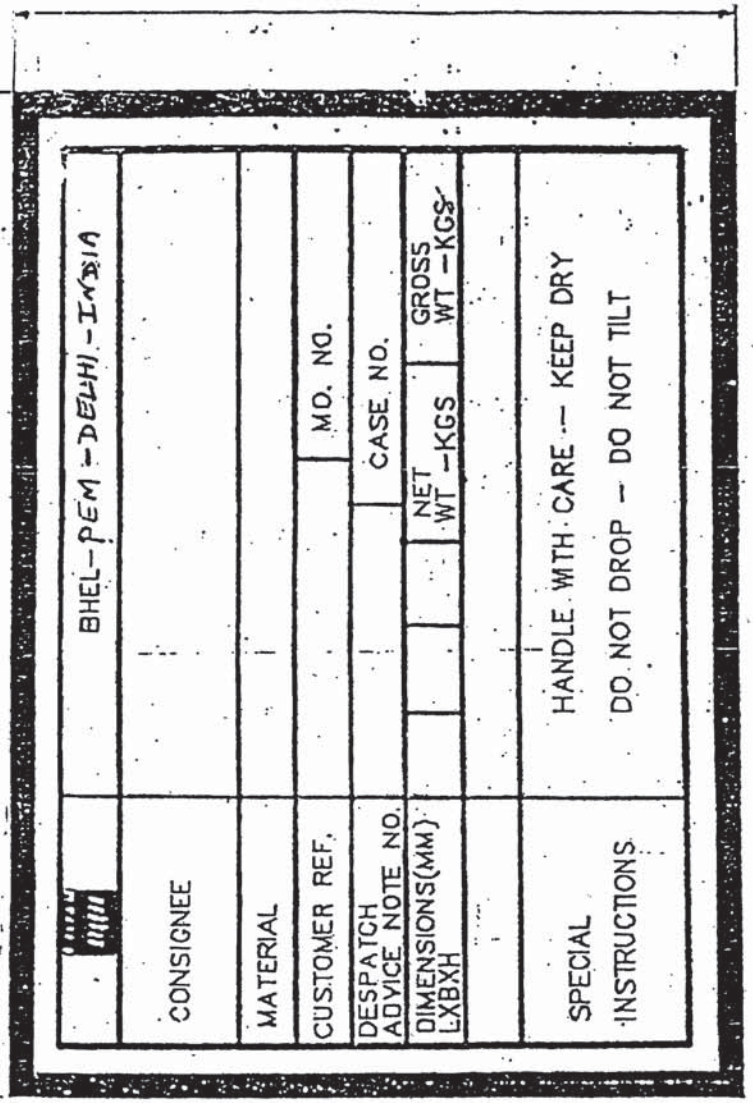

FIG-13: MARKING PLATE

	TITLE	SPECIFICATION NO. PE-TS-888-100-A001
	TECHNICAL SPECIFICATION FOR SEAWORTHY PACKING FOR EXPORT JOBS	VOLUME II B
		SECTION D
		REV. NO. 0 DATE 10/08/2010
		SHEET 27 OF 52

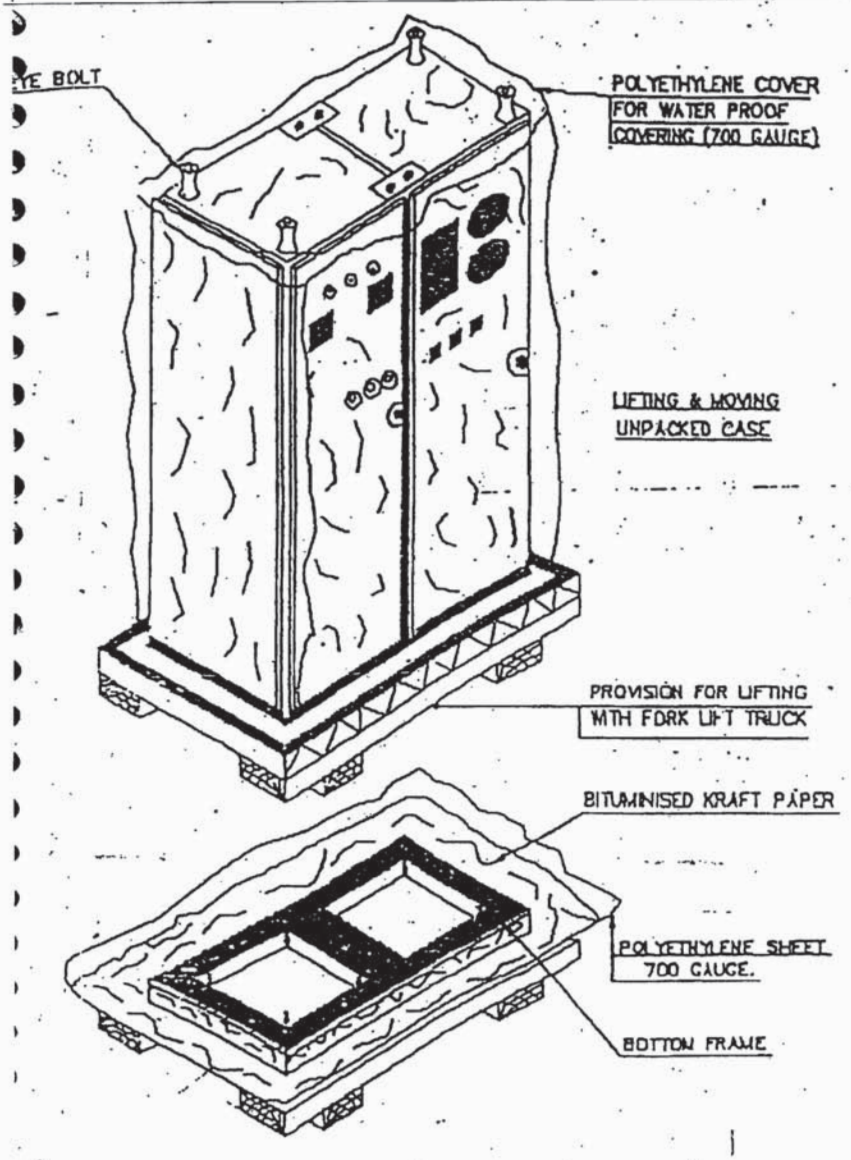

FIGURE–14

036

	TITLE	SPECIFICATION NO. PE-TS-888-100-A001
	TECHNICAL SPECIFICATION FOR SEAWORTHY PACKING FOR EXPORT JOBS	VOLUME II B
		SECTION D
		REV. NO. 0 DATE 10/08/2010
		SHEET 28 OF 52

Sht 16 of 17

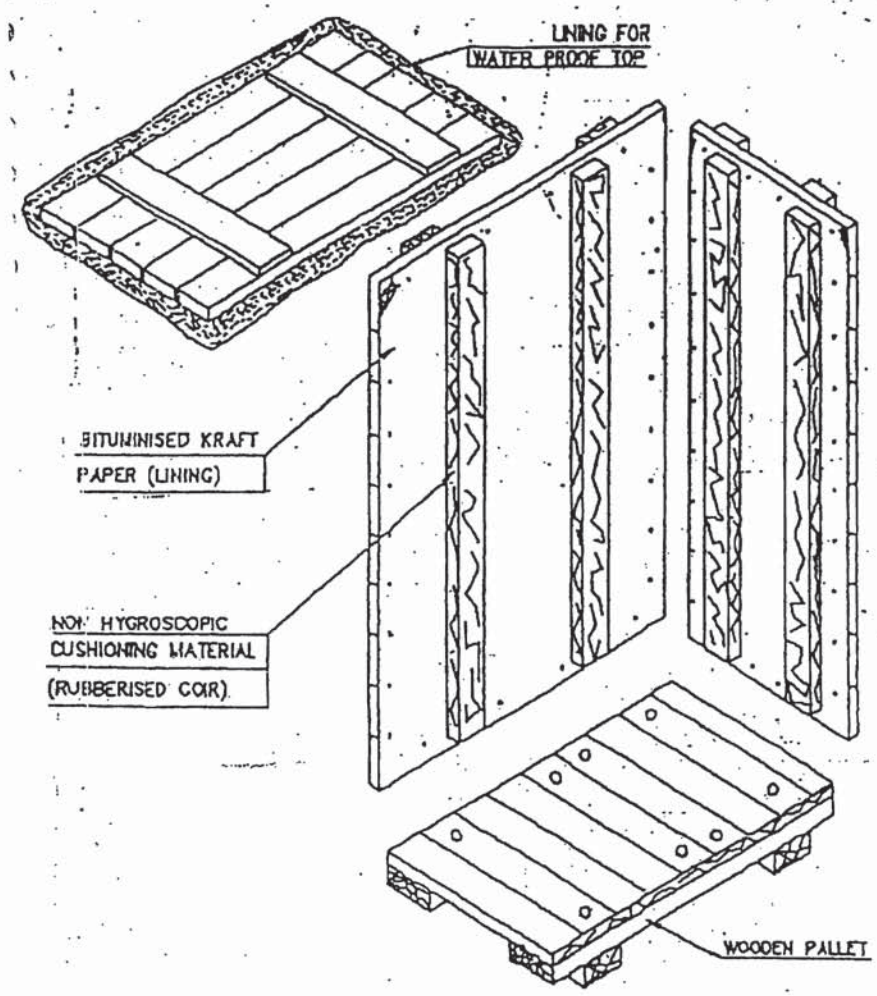

FIGURE-15

037

	TITLE	SPECIFICATION NO. PE-TS-888-100-A001
	TECHNICAL SPECIFICATION FOR SEAWORTHY PACKING FOR EXPORT JOBS	VOLUME II B
		SECTION D
		REV. NO. 0 DATE 10/08/2010
		SHEET 29 OF 52

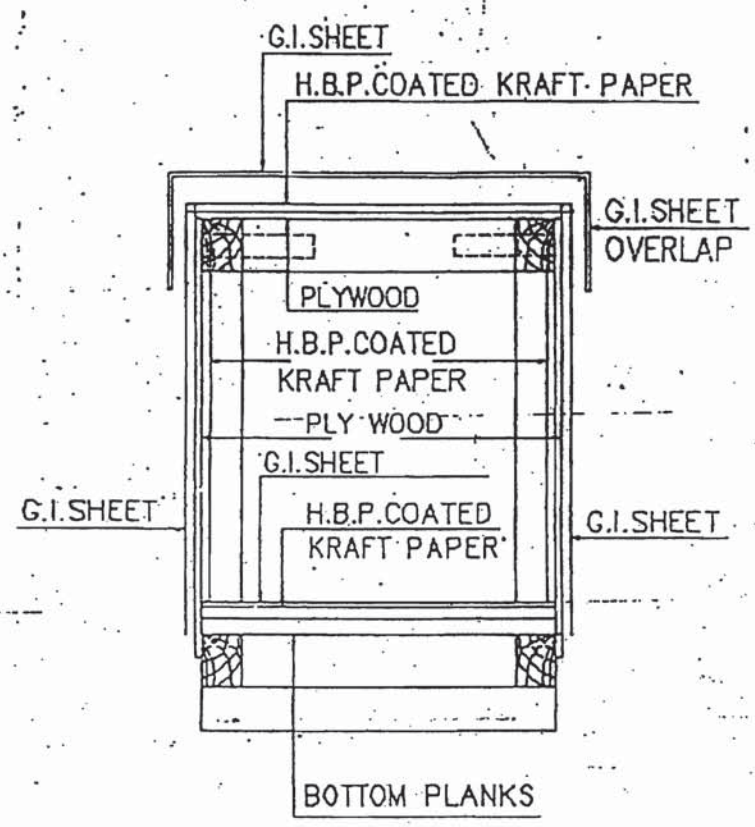

FIG-16 : CLOSED PACKING CASE WITH G.I.SHEET SHOWING LAYERS OF PACKING MATERIALS.

038

	TITLE TECHNICAL SPECIFICATION FOR SEAWORTHY PACKING FOR EXPORT JOBS	SPECIFICATION NO. **PE-TS-888-100-A001**
		VOLUME II B
		SECTION D
		REV. NO. 0 DATE 10/08/2010
		SHEET 30 OF 52

10.0 TYPICAL PACKING DETAILS/PROCEDURE FOR MECHANICAL ITEMS

10.1 INSULATION MATERIAL (MINERAL WOOL MATTRESSES)

This specification covers the requirements of seaworthy packing and marking for bonded mineral (rock) wool mattresses having metallic hexagonal wire netting as facing on one or both sides.

10.1.1 TYPE OF CONSTRUCTION

Mattress shall be packed in Polythene (of 0.2 mm thickness) all around and sealed to prevent moisture absorption during transit and storage. Further it shall be wrapped with Bitumen coated Polythene bonded/lined Hessian and stitched and then packed in 5 ply DFC carton box.

Silica gel is used for this purpose to protect contents over sufficiently long time from corrosion. Silica gel shall be of indicating type conforming to IS:304-1979 packed in cotton bags placed at different positions inside the packing for absorbing moisture and shall not come into direct contact with the material inside the package. The quantity of silica gel shall be enough for storage period of one year. However, it shall not be less than 4 gms per litre volume of case subject to minimum of 400 gms per case.

Each mattress as well as the packages shall be serial numbered. Also, printed sheets indicating the nominal thickness, density and wire netting details (i.e. material and size) shall be placed below the wire netting.

Following details shall be legibly written on the packages. The details shall also be typed on a sheet of paper & kept in a sealed Polythene cover, inside the packages

a) Project Name
b) Purchase Order No.
c) Sl. No. of package
d) Size of mattress (Thickness x Length x Width)
e) Density
f) Wire netting material and size
g) Weight of the package

10.2 INSULATION MATERIAL (ALUMINIUM COIL)

Heavy Gauge Aluminium Coil Packaging are done by Eye-to-Sky packaging or by Eye to eye packaging as per the proven practice being followed by manufacturer of Aluminium sheets.

10.2.1 Type of construction for Eye to Sky packaging

a. Strapping of coil with polyester strap around circumference at one place.

b. Putting paper I. D. Edge protector.

c. Wrapping the coil with VCI stretch film after putting silica gel bags (4 nos.) Inside the coil.

d. Wrapping the coil with HDPE film.

e. Covering the coil including its build up & bore with masonite / particle board.

f. Putting metallic I. D on coil.

g. Putting O.D edge protector (paper) on coil.

h. Putting circumferential polyester strap (3 nos.) & eye polyester strap (4 nos.).

i. After placing the coil on coil tilter ply wood (10mm thick) of suitable size along with wooden pallet is to be put at the bottom side of the coil.

j. Coil is to be tilted to eye-to-sky position.

k. Final strapping with metallic strap to unit coil and skid at 2 places with top cover of plywood.

l. Fixing the coil with wooden blocks at 4 corners.

m. Labeling 2 nos.(one metallic & one adhesivetype) For specification, net wt. & gross wt.

10.2.2 Type of construction for Eye to Eye packaging

a. Strapping of coil with polyester strap around circumference at one place.

b. Putting paper I. D. Edge protector.

c. Wrapping the coil with VCI stretch film after putting silica gel bags (4 nos.) Inside the coil.

d. Wrapping the coil with HDPE film.

e. Covering the coil including its build up & bore with masonite / particle board.

f. Putting metallic I. D on coil.

g. Putting O.D edge protector (paper) on coil.

h. Putting circumferential polyester strap (3 nos.) & eye polyester strap (4 nos.).

i. Placing of coil on wooden skid Coil is to be tilted to eye-to-sky position.

j. Final strapping of coil and skid at 2 places with steel strap. Fixing the coil with wooden blocks at 4 corners.

Labeling 2 nos.(one metallic & one adhesive type) For specification net wt. & gross wt.

10.3 Packing Procedure for Online Tube Cleaning System and accessories

This procedure is applicable for the shipment of Onload Tube Cleaning System and accessories by sea.

10.3.1 Packing details:

- The Packing case shall be made of treated rubber wood. The design of the case shall be as per Annexure IIIA & IIIB.
- The Equipments shall be placed on the wooden base of the Packing case and fastened if required to arrest the movement of the same.
- Equipment shall be covered by Polythene sheet and inside wall surfaces of the wooden cases also shall be covered by polythene sheet.
- All Nozzles shall be closed with plywood dummies.
- All electrical components assembled or loose shall be covered with polythene sheets along with silica gel pack.
- Silica gel desiccants shall be kept inside each case in sufficient quantities in order to absorb the moisture.

	TITLE TECHNICAL SPECIFICATION FOR SEAWORTHY PACKING FOR EXPORT JOBS	SPECIFICATION NO. **PE-TS-888-100-A001**
		VOLUME II B
		SECTION D
		REV. NO. 0 DATE 10/08/2010
		SHEET 32 OF 52

- Thermocol packing shall be made for glass items like Ball vessel sight glass, Vpiece
- sight glass & pressure gauge.
- Silica gel desiccants shall be kept inside of each case to absorb the moisture.
- A Packing list covered in a polythene envelope shall be fixed inside and outside of each packing case.
- Shipping marks and consignee address shall be painted on the outer surface of the case.
- All handling instruction required for the case like top, sling, rain, handle with care etc, shall be marked on the case as per the symbol attached.
- Machined surface will be applied with Anti rust oil and covered by polyurethane sheet to protect from external oxidation.
- All valves will be closed with dummies to protect the internals and placed in the wooden case which will covered by polyurethane sheet.

	TITLE TECHNICAL SPECIFICATION FOR SEAWORTHY PACKING FOR EXPORT JOBS	SPECIFICATION NO. **PE-TS-888-100-A001**
		VOLUME II B
		SECTION D
		REV. NO. 0 DATE 10/08/2010
		SHEET 33 OF 52

MODEL: FASTNERS TYPE (BASE, SIDE &TOP ATTACHED WITH BOLT, NUT & WASHER)

This Type of case to be used for following items:

1. BALL SEPERATOR
2. BALL COLECTOR SKID

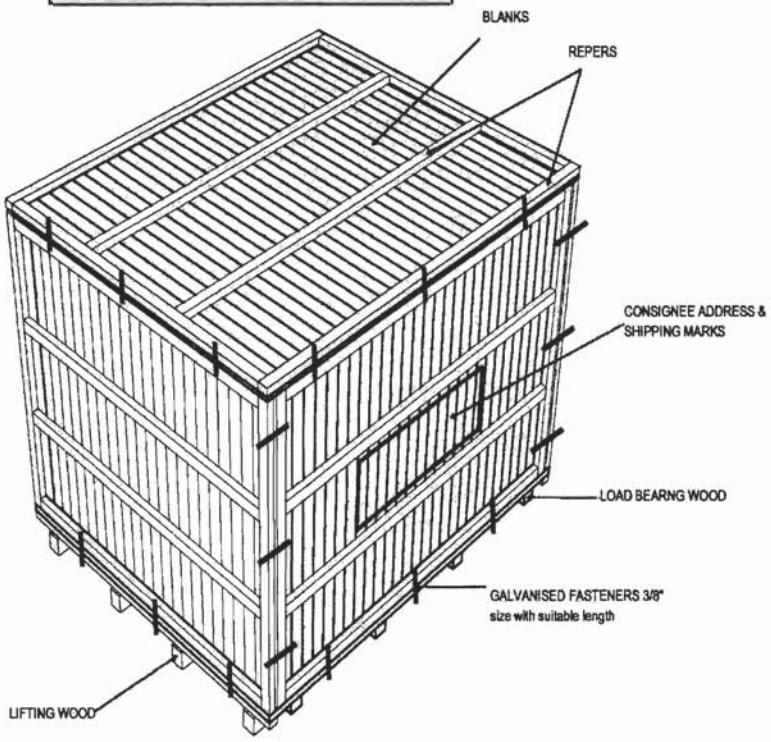

SHEET 05 of 10

	TITLE TECHNICAL SPECIFICATION FOR SEAWORTHY PACKING FOR EXPORT JOBS	SPECIFICATION NO. **PE-TS-888-100-A001**
		VOLUME II B
		SECTION D
		REV. NO. 0 DATE 10/08/2010
		SHEET 34 OF 52

BASE FRAME

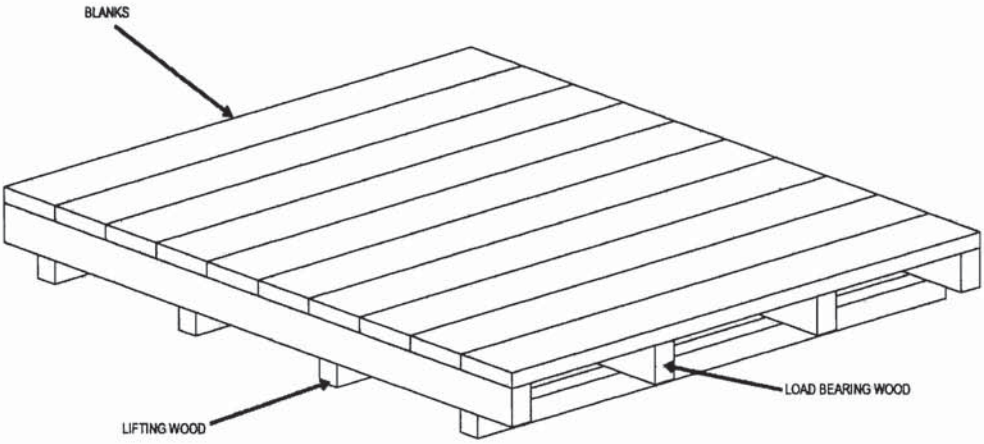

SHEET 06 of 10

	TITLE TECHNICAL SPECIFICATION FOR SEAWORTHY PACKING FOR EXPORT JOBS	SPECIFICATION NO. **PE-TS-888-100-A001**
		VOLUME II B
		SECTION D
		REV. NO. 0 DATE 10/08/2010
		SHEET 35 OF 52

MODEL: FASTNERS TYPE - WITHOUT TOP

SHEET 07 of 10

	TITLE TECHNICAL SPECIFICATION FOR SEAWORTHY PACKING FOR EXPORT JOBS	SPECIFICATION NO. **PE-TS-888-100-A001**
		VOLUME II B
		SECTION D
		REV. NO. 0 DATE 10/08/2010
		SHEET 36 OF 52

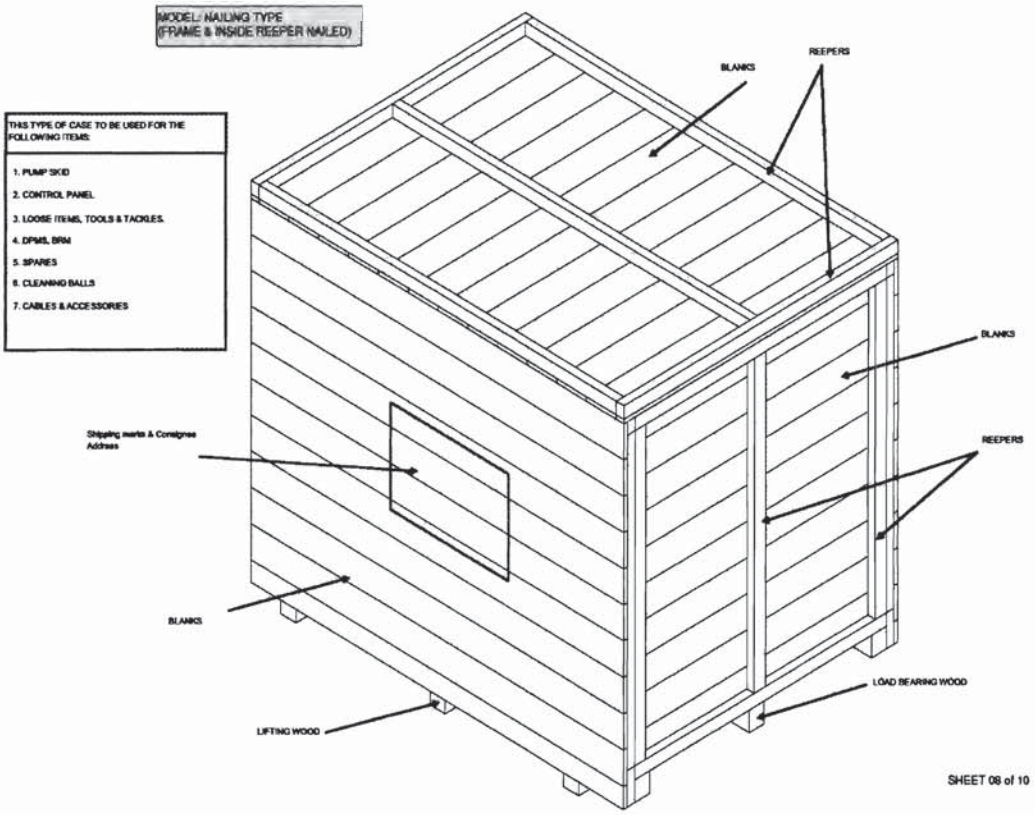

	TITLE TECHNICAL SPECIFICATION FOR SEAWORTHY PACKING FOR EXPORT JOBS	SPECIFICATION NO. **PE-TS-888-100-A001**
		VOLUME II B
		SECTION D
		REV. NO. 0 DATE 10/08/2010
		SHEET 37 OF 52

BASE FRAME

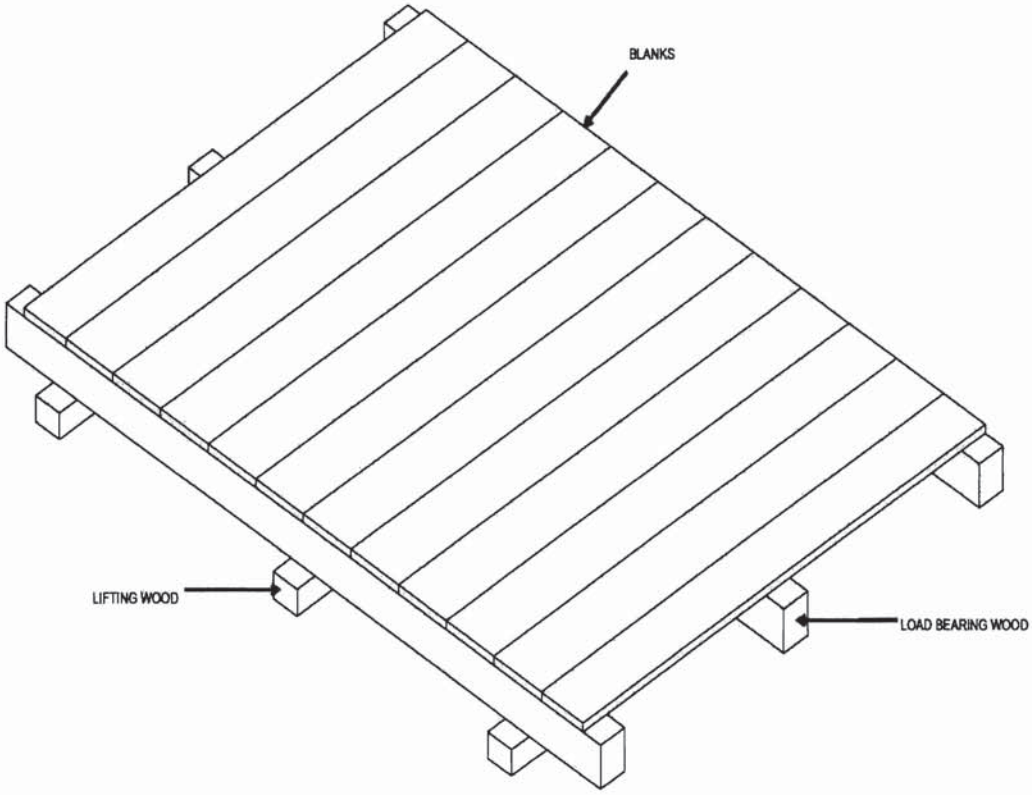

SHEET 09 of 10

	TITLE TECHNICAL SPECIFICATION FOR SEAWORTHY PACKING FOR EXPORT JOBS	SPECIFICATION NO. **PE-TS-888-100-A001**
		VOLUME II B
		SECTION D
		REV. NO. 0 DATE 10/08/2010
		SHEET 38 OF 52

NAILING TYPE MODEL WITH TOP OPEN

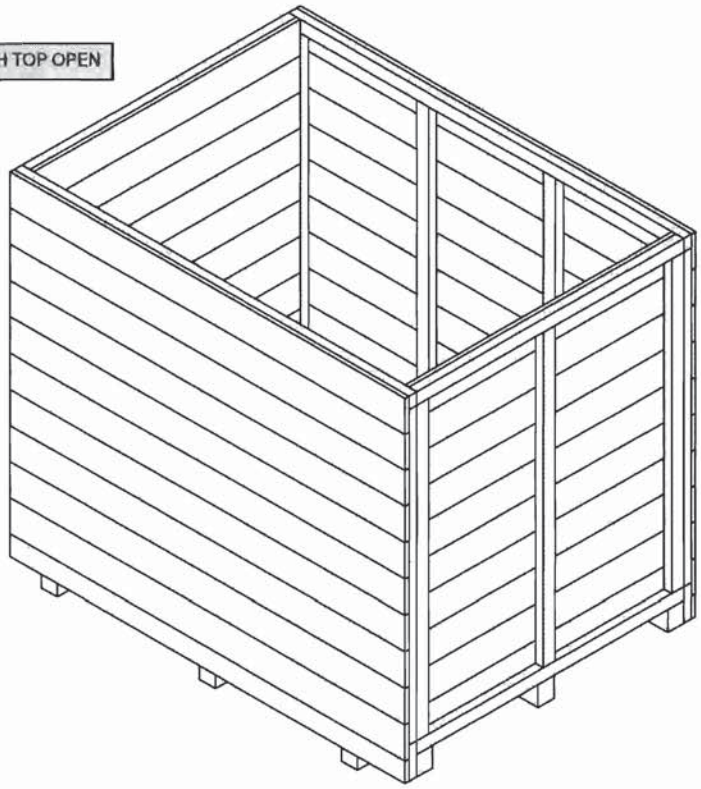

SHEET 10 of 10

	TITLE TECHNICAL SPECIFICATION FOR SEAWORTHY PACKING FOR EXPORT JOBS	SPECIFICATION NO. **PE-TS-888-100-A001**
		VOLUME II B
		SECTION D
		REV. NO. 0 DATE 10/08/2010
		SHEET 39 OF 52

10.4 PACKING OF LOOSE ITEMS

Loose mechanical, electrical and C&I items e.g. valves, fittings, pressure/temperature gauges/switches, circuit breakers, relays etc shall be individually wrapped using polyethylene sheets/U foam/ thermocol sheets/air bubble sheets depending upon the items and then packed in wooden boxes. The left out spaces and top of the boxes shall be filled with rubberized coir to get proper cushioning effect, Special attention shall be paid to relays, instruments etc for arresting the movements of their operating mechanism during transportation.

The construction of wooden packing cases shall be as per clause 9.3.1 retaining its all features concerning strength of the box. The construction of wooden packing case for electrical and C&I items shall be as per fig-16.

Inner surface of 6 sides of the box shall be lined with bitumen coated hessian polyethylene kraft paper. Rubberized coir of min. 25mm thickness and 100 mm width shall be nailed to inner surfaces of bottom and 4 sides of the boxes.

11.0 PACKING OF ELECTRICAL ITEMS

11.1 CABLES

11.1.1 Type of Equipment

All type of cables..

11.1.2 Type of Construction

New or practically new cable drums made of steel and painted with epoxy resin paint are to be used. Cable ends are carefully protected before packing. Over the cables polyethylene sheet shall be wrapped and then sealed properly. Cable drum can be put in wooden crates for ease in transportation and handling. (Wooden cable drum is also acceptable, however vendor to furnish constructional details for approval).

	TITLE TECHNICAL SPECIFICATION FOR SEAWORTHY PACKING FOR EXPORT JOBS	SPECIFICATION NO. **PE-TS-888-100-A001**
		VOLUME II B
		SECTION D
		REV. NO. 0 DATE 10/08/2010
		SHEET 40 OF 52

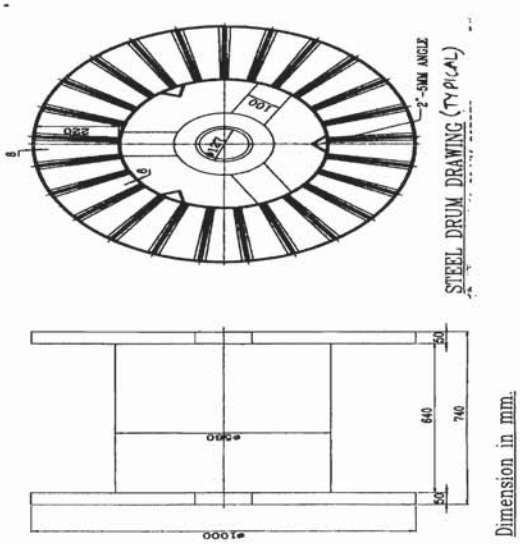

	TITLE	SPECIFICATION NO. **PE-TS-888-100-A001**
	TECHNICAL SPECIFICATION FOR SEAWORTHY PACKING FOR EXPORT JOBS	VOLUME II B
		SECTION D
		REV. NO. 0 DATE 10/08/2010
		SHEET 41 OF 52

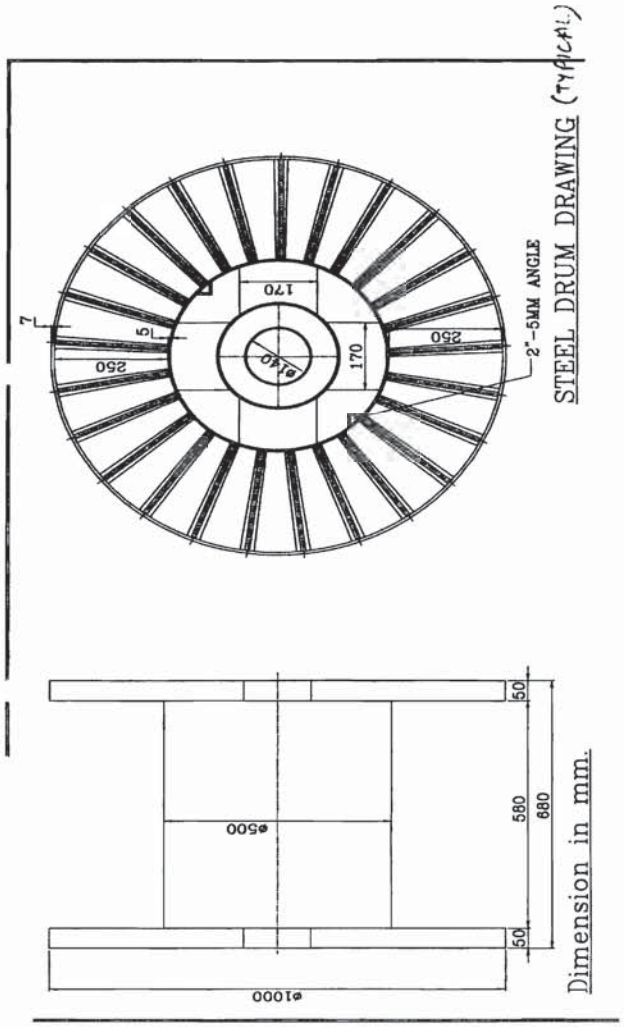

11.2 PACKING OF CABLE TRAYS & ACCESSORIES AND CABLE TRAY SUPPORT MATERIAL

11.2.1 Cable trays can be packed in wooden boxes as per fig 1 to 11 or in steel boxes. Details of steel box construction is as indicated below.

1) All Dimensions are in "mm" unless otherwise stated.
2) Packing Box shall be fabricated using 50x50x6mm MS Angle, 50x3mm Flat, 2.5 mm thick C Channel, 1mm & 1.6mm Thick sheet.
3) Finish of Packing Box Shall be Galvanized.
4) Angle & Channel Section forming part of the Main frame shall be welded thoroughly with each other to give a rigid structure.
5) Sheet Section and Flat section shall be bolted/ Riveted/ Welded suitably to the Main frame stated in '4' above.

	TITLE TECHNICAL SPECIFICATION FOR SEAWORTHY PACKING FOR EXPORT JOBS	SPECIFICATION NO. **PE-TS-888-100-A001**
		VOLUME II B
		SECTION D
		REV. NO. 0 DATE 10/08/2010
		SHEET 42 OF 52

6) Welding Portion on galvanized surfaces shall be painted with Zinc Rich Paint.

7) Dispatch details such as consignor/consignee address, contract and case details, 'country of origin, port of delivery, stacking instructions shall be written on one of the side of boxes. An anodized aluminium plate as per details and specifications given in page 3 of 5 shall be provided on the boxes

8) One copy of packing slip wrapped in polythylene bag covered with suitable aluminium .packing slip holder to be nailed on the external surface of the box. One more copy 9f the packing Slip wrapped in polythylene bag to be kept inside the box at the prominent place.

9) **INDICATION MARKS ON THE BOXES:** Markings shall be provided on the boxes indicating position of Boxes for handling, storage and nature of consignment. For guidelines referred page 4 of 5. The ink issued for this purpose as well as for marking dispatch instruction shall be indelible/non-washable marking ink.

10) Each item as mentioned in BOQ shall be packed & supplied as a set comprising of required numbers of associated fasteners & hardware etc

	TITLE	SPECIFICATION NO. PE-TS-888-100-A001
	TECHNICAL SPECIFICATION FOR SEAWORTHY PACKING FOR EXPORT JOBS	VOLUME II B
		SECTION D
		REV. NO. 0 DATE 10/08/2010
		SHEET 43 OF 52

STEEL PACKING (TYPICAL DETAILS)

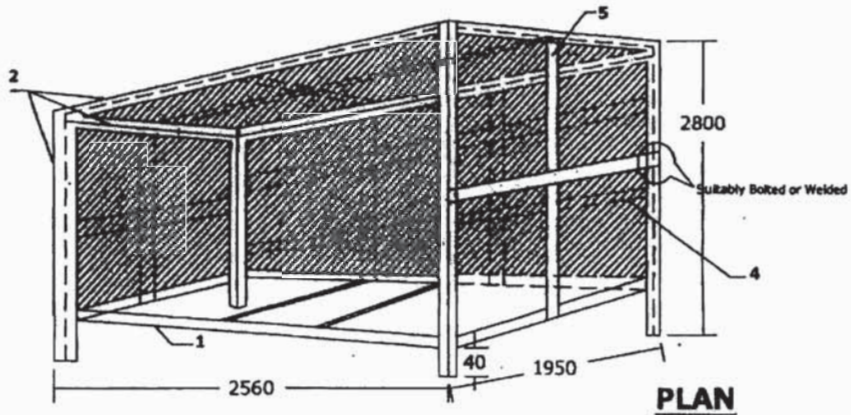

PLAN

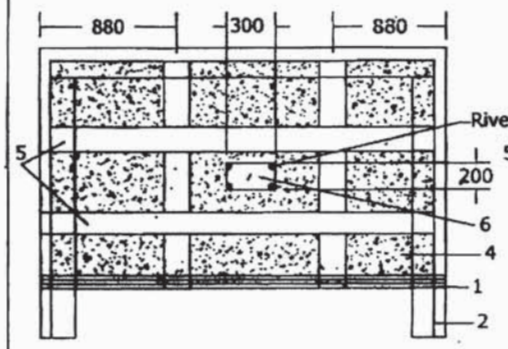

FRONT SIDE OF BOX

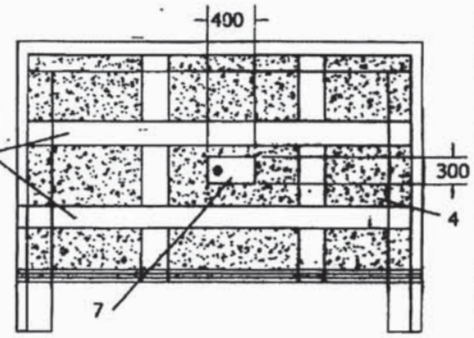

BACK SIDE OF BOX

Note:

1. "C" Channel to be used on Bottom Frame.
2. 50x50x6 Angle to be used Vertically on four sides of the Box and Horizontally on four sides on the top Frame.
3. 1.6mm thick sheet (plain) on Bottom Plate.
4. 1.0mm thick sheet to cover top & four sides of BOX.
5. 50x3 Flat as additional cross members to be used Horizontally & Vertically on top & Four Sides of Box.
6. Anodised Alluminium Plate for Marking.
7. Hinged Inspection Window.

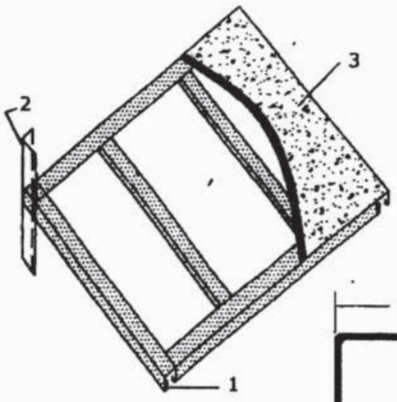

BOTTOM FRAME ARRANGEMENT

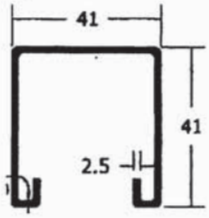

DETAILS OF "C" CHANNEL

Page 1 of 2

11.3 PACKING FOR STATION LIGHTING SYSTEM

Aspects of packing specific to equipments / items of station lighting system are given here. All other instructions / aspects as per the main specification of export packing which are not covered here shall also be applicable.

11.3.1 For LIGHTING TRANSFORMER, DISTRIBUTION BOARDS, LIGHTING PANELS,

a) Construction of packing case for LIGHTING DIATRIBUTION BOARDS, LIGHTING PANELS, TRANSFORMER . shall be EITHER as per FIGURE 1,2,3,5,6,7,8,9,10,11 OR FIGURE 14,15,16.

b) Each Panel/Transformer shall be individually covered with double polythene sheet of thickness 175 microns minimum.

c) All the 6 inner surfaces of packing shall be nailed with bitumen coated hessian polythene craft paper. Wherever 2 pieces of craft paper are used, the joint shall have minimum overlap of 20mm.

For the top frame it shall be project on all sides by 100mm and shall be nailed on sides .

d) The gap between the panels and packing case shall be filled with rubberized coir of thickness 50mm minimum and width 100mm. The distance between two consecutive supports of rubberized coir shall be less than 500mm.

e) Silica get packed in cotton bags shall be placed at different positions inside the packing.

f) Packing case shall be finally covered with GI sheet of thickness 0.4mm minimum.

11.3.2 For LUMINARIES, RECEPTACLES. EMERGENCY LIGHT, 240/24V TRANSFORMER, CEILING FAN, SWITCH BOARDS, FLEXIBLE CONDUIT, WIRES, EARTH WIRE. JUNCTION BOXES, ERECTION COMMIOSSIONING SPARES, RECOMMENDED SPARES , ERECTION MATERIAL AND CONSUMBALES

a) Construction of packing case for THE ABOVE MATERIAL shall be as per FIGURE 1to11.

b) Items placed inside the case shall be covered with double polythene sheet of thickness 175 microns minimum.

c) All the 6 inner surfaces of packing shall be nailed with bitumen coated hessian craft paper. wherever 2 pieces of craft paper are used, the joint shall have minimum overlap of 20mm. For the top frame it shall be project on all sides by 100mm and shall be nailed on sides.

d) Silica get packed in cotton bags shall be placed at different positions inside the packing.

11.3.3 For CONDUIT PIPE

As per international practice pipes are shipped in open bundles with metal strapping. Packing as per attached figure A shall be provided which is described as following:

a) Each bundle shall be wrapped with 2 layers of 175 microns thick polythene sheet.

b) Then bundle will be wrapped with bitumen coated hessian craft paper.

c) Bundle shall be strapped with steel straps.

d) An anodized aluminium packing description plate as per Figure No. 13 shall be provided.

11.3.4 For POLES

Poles will be wrapped with 2 layers of minimum 175 microns thick polythene sheet and then with bitumen coated hessian craft paper, packed as per Figure – C i.e. bundling.

11.3.5 For STRUCTURAL STEEL

	TITLE TECHNICAL SPECIFICATION FOR SEAWORTHY PACKING FOR EXPORT JOBS	SPECIFICATION NO. **PE-TS-888-100-A001**
		VOLUME II B
		SECTION D
		REV. NO. 0 DATE 10/08/2010
		SHEET 45 OF 52

Structural steel will be different sizes and shapes. Hence it will be packed as per Figure No. B and described as following :

a) Each bundle shall be wrapped with 2 layers of 175 microns thick polythene sheet.
b) Then bundle will be wrapped with bitumen coated hessian craft paper.
c) Bundle shall be strapped with steel straps.
d) An anodized aluminium packing description plate as per Figure No. 13 shall be provided.

	TITLE TECHNICAL SPECIFICATION FOR SEAWORTHY PACKING FOR EXPORT JOBS	SPECIFICATION NO. **PE-TS-888-100-A001**
		VOLUME II B
		SECTION D
		REV. NO. 0 DATE 10/08/2010
		SHEET 46 OF 52

PACKING PROCEDURE FOR CONDUIT PIPE

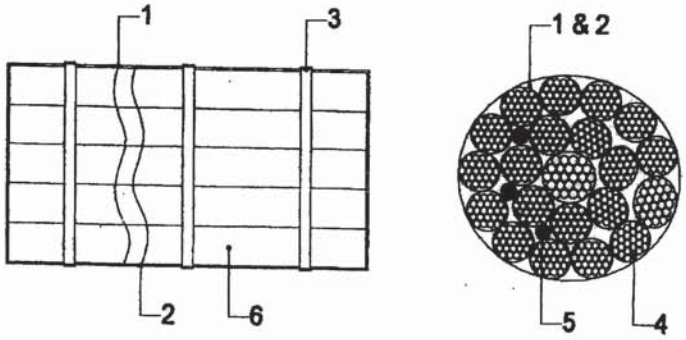

FIGURE "A"

1) LAYER OF BITUMEN COATED HESSIAN KRAFT PAPER.
2) LAYER OF POLYTHENE SHEET.
3) METAL STRAPPING.
4) CONDUIT PIPES.
5) SILICA GEL POUCHES.
6) BUNDLES OF CONDUIT PIPES.

17 of 20

	TITLE TECHNICAL SPECIFICATION FOR SEAWORTHY PACKING FOR EXPORT JOBS	SPECIFICATION NO. PE-TS-888-100-A001
		VOLUME II B
		SECTION D
		REV. NO. 0 DATE 10/08/2010
		SHEET 47 OF 52

PACKING PROCEDURE FOR STRUCTURAL STEEL

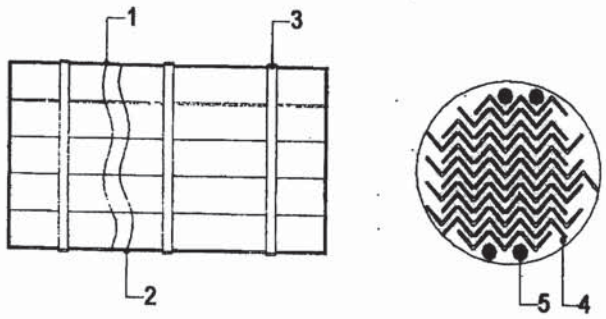

FIGURE "B"

1) LAYER OF BITUMEN COATED HESSIAN KRAFT PAPER.

2) LAYER OF POLYTHENE SHEET.

3) METAL STRAPPING.

4) STRUCTURAL STEEL.

5) SILICA GEL POUCHES.

	TITLE TECHNICAL SPECIFICATION FOR SEAWORTHY PACKING FOR EXPORT JOBS	SPECIFICATION NO. **PE-TS-888-100-A001**
		VOLUME II B
		SECTION D
		REV. NO. 0 DATE 10/08/2010
		SHEET 48 OF 52

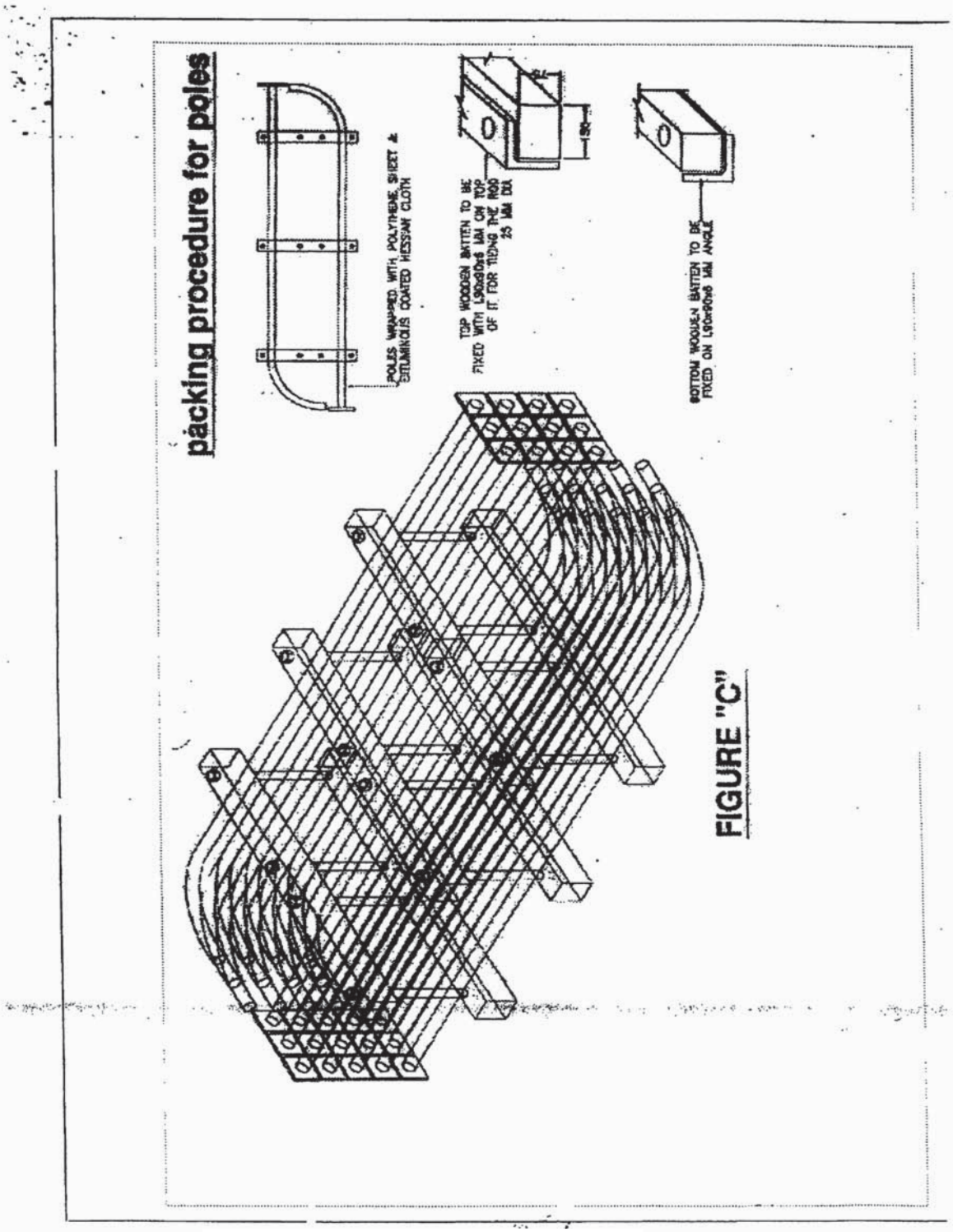

	TITLE TECHNICAL SPECIFICATION FOR SEAWORTHY PACKING FOR EXPORT JOBS	SPECIFICATION NO. **PE-TS-888-100-A001**
		VOLUME II B
		SECTION D
		REV. NO. 0 DATE 10/08/2010
		SHEET 49 OF 52

11.4 PACKING FOR DC BATTERY

The packing procedure for seaworthy packing of DC Battery is defined below, which is capable of withstanding impacts, compression, vibration, toppling, sea water spray, prevention against rust, temperature and extreme atmospheric conditions. Aspects of packing specific to equipments / items of DC Battery are given here. All other instructions / aspects as per the main specification of export packing which are not covered here shall also be applicable.

The packing procedure consists of various stages namely primary packing, cushioning, securing, desiccant, outside packing box, Runners/ sliders/ transverse bars of plywood, etc., provided for each movement.

a) The packing boxes shall be made up of plywood boxes (thickness 9mm min.) with blocks at the bottom of the box for provision for handling the boxes using the forklift. The packing boxes sizes are generally standardized to half-euro size (capable of handling equipment's weight).

b) Rubberized coir of 25mm thickness shall be provided as cushioning material at the bottom and thermocole of 20mm shall be provided inside on all four sides. Other than this polyethylene film wrap or cover also will be provided. Left out spaces to be filled with rubberized coir/ thermocol to get cushioning effect.

c) Silica gel in dust free air permeable cotton/paper bag shall be placed in the packing boxes for storage period of 1 year as per IS 304 (1979)

d) While packing the cells, transit caps (polypropylene) of red and blue shall be used for big size cells for ensuring that cells does not get damaged during the transport due to vibrations etc.

e) The battery accessories shall be packed with suitable precautions as follows:

i) Copper connectors shall be packed after making bunches with lead wire seals to avoid misplacement.
ii) Hardware items shall be packed in polyethylene bags (Thickness ≥ 0.175mm) with item slip
iii) Battery rack shall be packed in dismantled condition, wrapped with polyethylene sheet
iv) For Ni-Cd type battery, electrolyte in solid form for dry cells shall be packed in cans with KOH, LiOH being packed separately.
f) Galvanized Steel straps are provided for binding the packing box sides.
g) The handling instructions shall be marked in indelible/ non-washable ink, indicating the upright position.

11.5 PACKING OF SERVICE TRANSFORMERS(OIL FILLED) & ACCESSORIES

This instruction is applicable for packing of transformers (oil filled), its accessories and components so as to ensure safe delivery to end user. Aspects of packing specific to equipments / items of transformers(oil filled) are given here. All other instructions / aspects as per the main specification of export packing which are not covered here shall also be applicable.

11.5.01 PACKING DETAILS :

a Items shall be packed in case / crates as per the shipping list.
b All fragile items and small items shall be packed in cases and to be marked as "Fragile, handle with care Fragile items".
c Fragile accessories are to be first packed in their original boxes (VENDOR's packing). Very

small / delicate items such as glass thermometer, door keys shall be packed in separate box.

d In case original box is found damaged, suitable alternate box or packing method using felt or foam sheet and polythene wrap to be used.

e These boxes are then placed in identified wooden boxes. Inside of such boxes are lined with a layer of polythene sheet, packing wool / grass and another layer of polythene sheet before placing the boxes. All boxes are then wrapped with this polythene sheet before closing the box. Fragile items shall not be placed loose, one above the other inside the case.

f All wiring cables, connection flats of non-ferrous materials, CTs, valves bellows shall also be packed.

g Items like CTs, Oil communicating bushings, insulators, wired equipments and housings such as RTCC Panel, M. Box, Drive Mechanism, thermometers, gauges shall be wrapped in polythene from all around.

h Buchholz relay and OSR relay openings will be blanked using covers, before putting them in the box

i Items shall be carefully lowered and arranged inside the crate / case and each item shall be locked from all sides in such a way to avoid its movement in any way. Wooden stoppers and separators shall be provided for this and nailed to the crate / case wood.

j Wooden planks and batons in contact with fragile items shall be provided with kit foam at the locations of contact.

k Oil communication bushings shall be packed in separate case on V or U shape wooden felted supports, as in case of condenser bushings.

l While placing and arranging the items inside the crates / cases, these shall be verified for correctness and then the packing note shall be signed. The cover top of the crate / case shall then be closed.

m The main equipment like transformer tank shall be packed suitably to prevent any damage during transit / storage. Support structures like frame, header supports etc. shall be crated. Conservator headers shall also be crated. Radiators pipe work and other instruments & components shall be packed in cases. All the cases shall be lined with polythene from inside.

11.6 ALTERNATIVE PACKING CASES FOR CONTROL PANELS AND SWITCH GEARS

For Control and switch gear panels, construction of wooden packing cases may be provided as per fig 14 & 15 and as detailed below.

Thickness of planks for all sides, binding and jointing battens shall be at least 25 mm. Width of the plank shall be at least 125mm and that of binding and jointing planks shall be at least 100mm.

Top frame shall be suitable so that it does not collapse due to sandwiching between slings while lifting. Longitudinal and traverse bars for the bottom wooden pallet to be suitably selected.

Diagonal bracings shall be as per cl 9.3.1.3 and all other requirements shall be as per clauses 9.3.1.4 to 9.3.1.6.

12.0 Containerization

As required by BHEL, the VENDOR shall stuff the GOODS into 20 or 40 foot containers (dry, open top, flat racks, etc.).
The maximum inside dimensions of containers are to be considered:

- 40 foot containers: 11.80 m x 2.20 m x 2.05 m
- 20 foot containers: 5.80 m x 2.20 m x 2.05m
-

The present definition of containerization is valid for sea containers only. Vendor to check the size of containers before start of packing of equipment.

12.1 Protection of Cases/Crates

Since shipping containers are in general not water tight, packing in contact with the floor of the container shall be raised in order to prevent it from being damaged by the accumulation of water.

12.2 Mechanical Constraints

The mechanical constraints for "general use" closed containers are of a different nature (height of "stacking" being limited inside the containers), the packing for the GOODS may be of a lighter structure. However, it is necessary that the packing be appropriate so as to protect the GOODS on site during the storage period, as required after discharging of the GOOD'S from the containers.

Note:

It is the responsibility of the VENDOR to ensure that the cases/crates are stowed, secured and fastened inside the container. The VENDOR will take all necessary precautions to conform to the maximum weight allowed and the centre of gravity of the container. The securing and fastening of the cases/ crates can be carried out by nailing timbers on the bottom or on the vertical sides of the container.

13.0 Other Services to be provided by Vendor

In addition to the packing and shipping documents, VENDOR must also carry out the following services, which shall be included in his quotation:

Carriage of VENDOR's sub-contracted equipment and material, which must be re-grouped in VENDOR's or PACKER's workshops, whilst waiting for packaging.

BHEL reserves the right to postpone the shipping of the GOODS. In this event, any storage and insurance costs during the first ninety (90) days shall be borne by the VENDOR.

Loading, including lifting, securing, lashing, and stowing, of all cases, crates, or packages onto means of transportation such as, but not limited to, trailers, containers, etc.

14.0 Responsibilities and Guarantees

VENDOR is responsible for the choice of category for packing according to the transport facilities used, and on the basis of the present document. In case of doubt or disagreement regarding the choice, VENDOR must inform BHEL prior to packing and await BHEL's approval. All phases of packaging, marking, loading, etc. will be subject to BHEL inspection.

BHEL reserves the right to reject the packing when the packing does not conform to these instructions and/or when the packing does not ensure perfect protection of the GOODS.
VENDOR is responsible for the weights and dimensions declared, and the marking of the packages.

The documents must be in strict conformity with the packing contents.
The packing specified in these "Packing, Marking and Shipping Instructions" is guaranteed for a twelve (12) months storage period after delivery on site.

VENDOR is responsible for providing storage recommendation adapted to the GOODS. According to this guarantee, VENDOR is held responsible in the event of goods becoming

	TITLE TECHNICAL SPECIFICATION FOR SEAWORTHY PACKING FOR EXPORT JOBS	SPECIFICATION NO. **PE-TS-888-100-A001**
		VOLUME II B
		SECTION D
		REV. NO. 0 DATE 10/08/2010
		SHEET 52 OF 52

useless, damaged or broken, as a result of poor packing and/or stowing, or due to corrosion, subsequent to insufficient or inadequate protection. All direct or indirect costs resulting thereof, will be back-charged to VENDOR.

	2 X 250 MW NSPCL BHILAI TPP - FGD TECHNICAL SPECIFICATION FOR AGITATORS	SPECIFICATION No: PE-TS-468-571-18000-A002	
		SECTION-II	
		ANNEXURE-1	
		REV. 00	Date: SEP. 2020
		SHEET : 1 OF 1	

SECTION-II

ANNEXURE-1
LIST OF documents to be submitted with bid

	2 X 250 MW NSPCL BHILAI TPP - FGD TECHNICAL SPECIFICATION FOR AGITATORS	SPECIFICATION No: PE-TS-468-571-18000-A002	
		SECTION : II	
		ANNEXURE-1	
		REV. 00	Date: SEP. 2020
		SHEET : 1 OF 1	

BIDDER SHOULD SUBMIT THE SIGNED AND STAMPED COPY OF THE FOLLOWING DOCUMENTS:

1. Compliance cum confirmation certificate (Refer Annexure-2 of section-II).
2. Pre-bid clarification schedule as per format given under Section-II (Annexure-3), in case of any clarifications.
3. Deviation schedule as per format given under Section-II (Annexure-4), in case of any deviations by bidder.
4. Dully filled Guaranteed power consumption format (In the format attached with the price schedule) declaring guaranteed power consumption value in KW along with the Technical offer.
5. Agitator Schedule filled up by the bidder (Refer Annexure-8 of section-II).
6. GA drawing, Exploded view with Material of construction, total weight of all Agitators models offered.
7. Agitator and Motor Sizing Calculation.
8. Electrical Load data filled up by the bidder (Refer Annexure-5 of section-II).
9. Documents for meeting the Pre-Qualification Requirement (3K format has to be submitted along with supporting documents as given under Annexure-11, section-II).
10. Schedule of guarantees (Refer Annexure-10 of section-II).
11. Test arrangement @ shop.
12. Product catalogues.

	2 X 250 MW NSPCL BHILAI TPP - FGD TECHNICAL SPECIFICATION FOR AGITATORS	SPECIFICATION No: PE-TS-468-571-18000-A002
		SECTION-II
		ANNEXURE-2
		REV. 00 / Date: SEP. 2020
		SHEET : 1 OF 1

SECTION-II

ANNEXURE-2
COMPLIANCE CUM CONFIRMATION CERTIFICATE

	2 X 250 MW NSPCL BHILAI TPP - FGD TECHNICAL SPECIFICATION FOR AGITATORS	SPECIFICATION No: PE-TS-468-571-18000-A002	
		SECTION : II	
		ANNEXURE-2	
		REV. 00	Date: SEP. 2020
		SHEET : 1 OF 2	

COMPLIANCE CUM CONFIRMATION CERTIFICATE

The bidder shall confirm compliance with following by signing / stamping this compliance certificate (every sheet) and furnish same with the offer.

a) The scope of supply, technical details, construction features, design parameters etc. shall be as per technical specification & there are no exclusions, other than those mentioned under "exclusion and those resolved as per 'Schedule of Deviations', with regard to same.

b) There are no other deviations w.r.t. specifications other than those furnished in the 'Schedule of Deviations'. Any other deviation, stated or implied, taken elsewhere in the offer stands withdrawn unless specifically brought out in the 'Schedule of Deviations'

c) Bidder shall submit QP in the event of order based on the guidelines given in the specification & QP enclosed therein. QP will be subject to BHEL / CUSTOMER approval & customer hold points for inspection / testing shall be marked in the QP at the contract stage. Inspection / testing shall be witnessed as per same apart from review of various test certificates/ Inspection records etc. This is within the contracted price without any extra implications to BHEL after award of the contract.

d) All drawings/ data-sheets / calculations etc. submitted along with the offer shall not be taken cognizance off.

e) The offered materials shall be either equivalent or superior to those specified in the specification & shall meet the specified / intended duty requirements. In case the material specified in the specifications is not compatible for intended duty requirements then same shall be resolved by the bidder with BHEL during the pre-bid discussions, otherwise BHEL / Customer's decision shall be binding on the bidder whenever the deficiency is pointed out.

   For components where materials are not specified, same shall be suitable for intended duty, all materials shall be subject to approval in the event of order.

f) The commissioning spares shall be supplied on 'As Required Basis' & prices for same included in the base price itself.

g) All sub vendors shall be subject to BHEL / CUSTOMER approval in the event of order.

h) Guarantee for plant/equipment shall be as per relevant clause of GCC / SCC / Other Commercial Terms & Conditions

i) In the event of order, all the material required for completing the job at site shall be supplied by the bidder within the ordered price even if the same are additional to approved billing break up, approved drawing or approved Bill of quantities within the scope of work as tender specification. This clause will apply in case during site

commissioning, additional requirements emerges due to customer and / or consultant's comments. No extra claims shall be put on this account

j) Schedule of drawings submissions, comment incorporations & approval shall be as stipulated in the specifications. The successful bidder shall depute his design personnel to BHEL's / Customer's / Consultant's office for across the table resolution of issues and to get documents approved in the stipulated time.

k) As built drawings shall be submitted as and when required during the project execution.

l) The bidder has not tempered with this compliance cum confirmation certificate and if at any stage any tempering in the signed copy of this document is noticed then same shall be treated as breach of contract and suitable actions shall be taken against the bidder.

m) Successful bidder shall furnish detailed erection manual for each of the equipment supplied under this contract at least 3 months before the scheduled erection of the concerned equipment / component or along with supply of concerned equipment / component whichever is earlier.

n) Document approval by customer under Approval category or information category shall not absolve the vendor of their contractual obligations of completing the work as per specification requirement. Any deviation from specified requirement shall be reported by the vendor in writing and require written approval. Unless any change in specified requirement has been brought out by the vendor during detail engineering in writing while submitting the document to customer for approval, approved document (with implicit deviation) will not be cited as a reason for not following the specification requirement.

o) In case vendor submits revised drawing after approval of the corresponding drawing, any delay in approval of revised drawing shall be to vendor's account and shall not be used as a reason for extension in contract completion.

	2 X 250 MW NSPCL BHILAI TPP - FGD TECHNICAL SPECIFICATION FOR AGITATORS	SPECIFICATION No: PE-TS-468-571-18000-A002
		SECTION-II
		ANNEXURE-3
		REV. 00 / Date: SEP. 2020
		SHEET : 1 OF 1

SECTION-II

ANNEXURE-3
PRE-BID CLARIFICATION SCHEDULE

2 X 250 MW NSPCL BHILAI TPP - FGD TECHNICAL SPECIFICATION FOR AGITATORS	SPECIFICATION No: PE-TS-468-571-18000-A002	
	SECTION-II	
	ANNEXURE-3	
	REV. 00	Date: SEP. 2020
	SHEET : 1 OF 1	

PRE-BID CLARIFICATION SCHEDULE

S.No.	Section/Clause/ Page No.	Statement of the referred clause	Clarification required

The bidder hereby certifies that above mentioned are the only clarifications required on the technical specification for the subject package.

SIGNATURE:_____

NAME : _____

DESIGNATION:_____

COMPANY: _____

DATE:_____

COMPANY SEAL

	2 X 250 MW NSPCL BHILAI TPP - FGD TECHNICAL SPECIFICATION FOR AGITATORS	SPECIFICATION No: PE-TS-468-571-18000-A002
		SECTION-II
		ANNEXURE-4
		REV. 00 / Date: SEP. 2020
		SHEET : 1 OF 1

SECTION-II

ANNEXURE-4
SCHEDULE OF TECHNICAL DEVIATION

(PLEASE REFER GCC FOR THE FORMAT OF DEVIATION SCHEDULE)

	2 X 250 MW NSPCL BHILAI TPP - FGD TECHNICAL SPECIFICATION FOR AGITATORS	SPECIFICATION No: PE-TS-468-571-18000-A002
		SECTION-II
		ANNEXURE-5
		REV. 00 / Date: SEP. 2020
		SHEET : 1 OF 1

SECTION-II

ANNEXURE-5
LOAD DATA (ELECTRICAL)

LOAD TITLE	RATING (KW / A)		UNIT (U)/STN (S)	Nos.		VOLTAGE CODE*	FEEDER CODE**	EMER. LOAD (Y)	CONT.(C)/ INTT.(I)	STARTING TIME >5 SEC (Y)	LOCATION	BOARD NO.	CABLE		BLOCK CABLE DRG. No.	CONTROL CODE	REMARKS	LOAD No.
	NAME PLATE	MAX. CONT. DEMAND (MCR)		RUNNING	STANDBY								SIZE CODE	NOs				
1	2	3	4	5	6	7	8	9	10	11	12	13	14	15	16	17	18	19
ANNEXURE-IV																		
Filtrate Water Tank Agitator				1	0				C									
Primary Hydro-cyclone Feed Tank Agitator				1	0				C									
Secondary Hydro-cyclone Feed Tank Agitator				1	0				C									
Waste Water Tank Agitator				1	0				C									
Limestone Slurry Storage Tank Agitator				2	0				C									
Absorber Area Drain Sump Agitator-1				1	0				I									
Absorber Area Drain Sump Agitator-2				1	0				I									
Auxiliary Absorbent Tank Agitator				3	0				I									
Gypsum Dewatering Area Drain Sump Agitator				1	0				I									
Limestone Area Drain Sump Agitator				1	0				I									

NOTES:
1. COLUMN 1 TO 12 & 18 SHALL BE FILLED BY THE REQUISITIONER (ORIGINATING AGENCY); REMAINING COLUMNS ARE TO BE FILLED UP BY PEM (ELECTRICAL)/ CUSTOMER
2. ABBREVIATIONS : * VOLTAGE CODE (7):- (ac) A=11 KV, B=6.6 KV, C=3.3 KV, D=415 V, E=240 V (1 PH), F=110 V (cc): G=220 V, H=110 V, J=48 V, K=+24V, L=-24 V
: ** FEEDER CODE (8):- U=UNIDIRECTIONAL STARTER, B=BI-DIRECTIONAL STARTER, S=SUPPLY FEEDER, D=SUPPLY FEEDER (CONTACTER CONTROLLED)

ANNEXURE-5 LOAD DATA (ELECTRICAL)	JOB NO.	468	ORIGINATING AGENCY		PEM (ELECTRICAL)	
	PROJECT TITLE	2 X 250 MW NSPCL BHILAI TPP - FGD	NAME		DATA FILLED UP ON	
	SYSTEM	AGITATOR	SIGN.		DATA ENTERED ON	
	DEPTT. / SECTION	MAUX	SHEET 1 OF 1	REV. 01	DE'S SIGN. & DATE	

	2 X 250 MW NSPCL BHILAI TPP - FGD TECHNICAL SPECIFICATION FOR AGITATORS	SPECIFICATION No: PE-TS-468-571-18000-A002
		SECTION : II
		ANNEXURE-7
		REV. 00 / Date: SEP. 2020
		SHEET : 1 OF 1

ANNEXURE-7

LIST OF TOOLS & TACKLES

	2 X 250 MW NSPCL BHILAI TPP - FGD TECHNICAL SPECIFICATION FOR AGITATORS	SPECIFICATION No: PE-TS-468-571-18000-A002
		SECTION : II
		ANNEXURE-7
		REV. 00 / Date: SEP. 2020
		SHEET : 1 OF 1

Bidder shall supply a set of special tools and tackles required either for erection or operation or maintenance of the agitator units. A list of such tools and tackles shall be submitted along with the offer.

SECTION-II, ANNEXURE-8

AGITATOR SCHEDULE

2 X 250 MW NSPCL BHILAI TPP - FGD
SPECIFICATION No: PE-TS-468-571- 18000-A002
AGITATOR SCHEDULE (To be sumbmitted with the offer by Bidder)

Sl.no.	Description	Primary Hydrocyclone feed tank Agitator	Filtrate water tank Agitator	Secondary Hydrocyclone feed tank Agitator	Waste water Tank Agitator	Limestone Slurry Storage tank Agitator	Auxiliary Absorbent Tank Agitator	Absorber Area Drain Pit Agitator	Gypsum Dewatering Area Drain Pits Agitator	LIMESTONE AREA DRAIN SUMP
1	Agitator Sl No.	1	2	3	4	5	6	7	8	9
2	Type	Vertical Type – (Center Mounted)	Vertical Type – (Center Mounted)	Vertical Type – (Center Mounted)	Vertical Type – (Center Mounted)	Vertical Type – (Center Mounted)	Blade turbine - Marine propeller side entry	Vertical Type – (Center Mounted)	Vertical Type – (Center Mounted)	Vertical Type – (Center Mounted)
3	Medium to be handled	Gypsum slurry	Gypsum slurry	Gypsum slurry	Gypsum slurry	Limestone slurry	Gypsum slurry	Gypsum slurry	Gypsum slurry	Limestone slurry
4	Seal Type	Not required	Not required	Not required	Not required	Not required	Mechanical seal (emergency flush start)required in case of side entry	Not required	Not required	Not required
5	Duty	Continuous	Continuous	Continuous	Continuous	Continuous	Intermittent -Whenever FGD is under maintenance	Intermittent	Intermittent	Intermittent
6	Agitator Location	Outdoor	Outdoor	Outdoor	Outdoor	Outdoor	Outdoor	Outdoor	Outdoor	Outdoor
7	Operation	Continuous	Continuous	Continuous	Continuous	Continuous	Intermittent -Whenever FGD is under maintenance	Intermittent	Intermittent	Intermittent
8	Tank details									
a)	Tank Shape	Circular	Circular	Circular	Circular	Circular	Circular	Rectangular	Rectangular	Rectangular
b)	Tank name	Primary Hydrocyclone feed tank	Filtrate water tank	Secondary Hydrocyclone feed tank	Waste water Tank	Limestone Slurry Storage tank	Auxiliary Absorbent Tank	Absorber Area Drain Pit	Gypsum Area Drain Sump	Limestone Area Drain Sump
c)	Capacity of Slurry (in m3)	88.4 m^3	43.98	50.3	118.8	604.4	746.13	#REF!	#REF!	#REF!
9	Dimension (in m)									
d)	Diameter	5.0	4.0	4	5.5	9.0	10.0	-	-	-
e)	Length	-	-	-	-	-	-	4	4	4
f)	Breadth	-	-	-	-	-	-	4	4	4
g)	Height	5*	4*	4.5*	5.5*	10*	10*	4*	4*	4*
9	MOC of Agitator	Agitator blades shall be made with Alloy 926 or better material & Agitator shaft can be rubber lined.	Agitator blades shall be made with Alloy 926 or better material & Agitator shaft can be rubber lined.	Agitator blades shall be made with Alloy 926 or better material & Agitator shaft can be rubber lined.	Agitator blades shall be made with Alloy 926 or better material & Agitator shaft can be rubber lined.	Agitator blades shall be made with Alloy 926 or better material & Agitator shaft can be rubber lined.	Agitator Shaft (which is continuously in contact with slurry) and blades shall be made with Alloy 926 or better material.	Agitator blades shall be made with Alloy 926 or better material & Agitator shaft can be rubber lined.	Agitator blades shall be made with Alloy 926 or better material & Agitator shaft can be rubber lined.	Agitator blades shall be made with Alloy 926 or better material & Agitator shaft can be rubber lined.
10	Minimum liquid level in the tank	1.0	1.0	1.0	1.0	1.0	1.0	1.4	1.4	1.4
11	Normal liquid level in the tank	4.3	3.3	3.8	4.8	9.3	9.3	3.3	3.3	3.3
12	Maximum liquid level in the tank	4.5	3.5	4	5	9.5	9.5	3.5	3.5	3.5
13	Quantity of Agitator per tank	1 No.	1 No.	1 No.	1 No.	1 No.	3 nos. - side entry	1 No.	1 No.	1 No.
14	Total quantity of agitators (for two units)	1 No.	1 No.	1 No.	1 No.	2 No's	3 nos. - side entry	2 No's	1 No.	1 No.
15	Slurry Analysis									
a)	Slurry to be handled	Gypsum slurry	Gypsum slurry	Gypsum slurry	Gypsum slurry	Limestone slurry	Gypsum slurry	Gypsum slurry	Gypsum slurry	Limestone slurry
b)	Maximum solid particle size	200 mesh (74 μ)	6-7 mm	200 mesh (74 μ)	200 mesh (74 μ)	200 mesh (74 μ)	200 mesh (74 μ)	6-7 mm	6-7 mm	6-7 mm
c)	Normal solid particle size, d50	325 mesh (44 μ)	6-7 mm	325 mesh (44 μ)	325 mesh (44 μ)	325 mesh (44 μ)	325 mesh (44 μ)	6-7 mm	6-7 mm	6-7 mm

d)	Solid to be handled	Gypsum along with Limestone & other impurities	gypsum along with Limestone & other impurities	gypsum along with Limestone & other impurities	gypsum along with Limestone & other impurities	Limestone + impurities	gypsum along with Limestone & other impurities	gypsum along with Limestone & other impurities	gypsum along with Limestone & other impurities	Limestone + impurities
e)	Chloride concentration	max 25000 ppm	max 25000 ppm	max 25000 ppm	max 25000 ppm	max 1000 ppm	max 25000 ppm	max 25000 ppm	max 25000 ppm	max 1000 ppm
f)	Hardness of particle	5-7 mho scale	5-7 mohs scale	5-7 mohs scale	5-7 mohs scale	5-7 mohs scale	5-7 mohs scale	5-7 mohs scale	5-7 mohs scale	5-7 mohs scale
g)	Slurry concentration, wt%	30 wt%	11%	16.60%	3%	30 wt%	30%	30%	30%	30 wt%
h)	Sp. Gravity of slurry	1.213	1.066	1.109	1.02	1.215	1.213	1.213	1.213	1.215
i)	Sp. Gravity of Lime Stone & Gypsum	2.32(avg)	2.32(avg)	2.32(avg)	2.32(avg)	2.32(avg)	2.32(avg)	2.32(avg)	2.32(avg)	2.32(avg)
j)	Viscosity of Slurry	10 cP	4 cP	4 cP	3 cP	30 cP	10 cP	10 cP	10 cP	30 cP
k)	pH	4 to 8	4 to 8	4 to 8	4 to 8	5 to 8	4 to 8	4 to 8	4 to 8	5 to 8
l)	SiO_2 Content	4 to 6 g/l	4 to 6 g/l	4 to 6 g/l	4 to 6 g/l	4 to 6 g/l	4 to 6 g/l	4 to 6 g/l	4 to 6 g/l	4 to 6 g/l
m)	Temperature	Normal -62 deg C; Design-70 deg C.	Normal -58 deg C; Design-70 deg C	Normal -62 deg C; Design-70 deg C.	Normal -62 deg C; Design-70 deg C.	Normal -45 deg C; Design-55 deg C.	Normal -62 deg C; Design-70 deg C.	Normal -62 deg C; Design-70 deg C.	Normal -62 deg C; Design-70 deg C.	Normal -45 deg C; Design-55 deg C.
13	Motor									
a)	Total Power consumed	**To be filled by bidder**	**To be filled by bidder**	**To be filled by bidder**	**To be filled by bidder**	**To be filled by bidder**	**To be filled by bidder**	**To be filled by bidder**	**To be filled by bidder**	**To be filled by bidder**
b)	Motor Rating	**To be filled by bidder**	**To be filled by bidder**	**To be filled by bidder**	**To be filled by bidder**	**To be filled by bidder**	**To be filled by bidder**	**To be filled by bidder**	**To be filled by bidder**	**To be filled by bidder**
c)	Motor Explosion Proof Class	Non-Flame Proof	Non-Flame Proof	Non-Flame Proof	Non-Flame Proof	Non-Flame Proof	Non-Flame Proof	Non-Flame Proof	Non-Flame Proof	Non-Flame Proof
d)	Motor Protection Class	IP-55/ Outdoor	IP-55/ Outdoor	IP-55/ Outdoor	IP-55/ Outdoor	IP-55/ Outdoor	IP-55/ Outdoor	IP-55/ Outdoor	IP-55/ Outdoor	IP-55/ Outdoor
e)	Motor Efficiency Class	IE-3	IE-3	IE-3	IE-3	IE-3	IE-3	IE-3	IE-3	IE-3
14	Minimum Liquid level In the tank	**To be filled by bidder**	**To be filled by bidder**	**To be filled by bidder**	**To be filled by bidder**	**To be filled by bidder**	**To be filled by bidder**	**To be filled by bidder**	**To be filled by bidder**	**To be filled by bidder**
15	Impeller									
a)	Type of impeller	**To be filled by bidder**	**To be filled by bidder**	**To be filled by bidder**	**To be filled by bidder**	**To be filled by bidder**	**To be filled by bidder**	**To be filled by bidder**	**To be filled by bidder**	**To be filled by bidder**
b)	No. of impeller per agitator	**To be filled by bidder**	**To be filled by bidder**	**To be filled by bidder**	**To be filled by bidder**	**To be filled by bidder**	**To be filled by bidder**	**To be filled by bidder**	**To be filled by bidder**	**To be filled by bidder**
c)	Impeller diameter	**To be filled by bidder**	**To be filled by bidder**	**To be filled by bidder**	**To be filled by bidder**	**To be filled by bidder**	**To be filled by bidder**	**To be filled by bidder**	**To be filled by bidder**	**To be filled by bidder**
d)	Impeller tip speed	**To be filled by bidder**	**To be filled by bidder**	**To be filled by bidder**	**To be filled by bidder**	**To be filled by bidder**	**To be filled by bidder**	**To be filled by bidder**	**To be filled by bidder**	**To be filled by bidder**
e)	Operating speed	**To be filled by bidder**	**To be filled by bidder**	**To be filled by bidder**	**To be filled by bidder**	**To be filled by bidder**	**To be filled by bidder**	**To be filled by bidder**	**To be filled by bidder**	**To be filled by bidder**
f)	Agitator Pumping Capacity	**To be filled by bidder**	**To be filled by bidder**	**To be filled by bidder**	**To be filled by bidder**	**To be filled by bidder**	**To be filled by bidder**	**To be filled by bidder**	**To be filled by bidder**	**To be filled by bidder**
g)	Volume/Agitator	**To be filled by bidder**	**To be filled by bidder**	**To be filled by bidder**	**To be filled by bidder**	**To be filled by bidder**	**To be filled by bidder**	**To be filled by bidder**	**To be filled by bidder**	**To be filled by bidder**
16	Baffle Plates (not in bidder's scope)									
a)	No. & size of baffle plates	**To be filled by bidder**	**To be filled by bidder**	**To be filled by bidder**	**To be filled by bidder**	**To be filled by bidder**	**To be filled by bidder**	**To be filled by bidder**	**To be filled by bidder**	**To be filled by bidder**
c)	Thickness of baffle plates (mm)	**To be filled by bidder**	**To be filled by bidder**	**To be filled by bidder**	**To be filled by bidder**	**To be filled by bidder**	**To be filled by bidder**	**To be filled by bidder**	**To be filled by bidder**	**To be filled by bidder**
d)	Distance from Bottom of the tank	**To be filled by bidder**	**To be filled by bidder**	**To be filled by bidder**	**To be filled by bidder**	**To be filled by bidder**	**To be filled by bidder**	**To be filled by bidder**	**To be filled by bidder**	**To be filled by bidder**
17	Nozzle (not in bidder's scope)									
a)	Size of the nozzle on which agitator frame is mounted	**To be filled by bidder**	**To be filled by bidder**	**To be filled by bidder**	**To be filled by bidder**	**To be filled by bidder**	**To be filled by bidder**	NA	NA	NA
18	Loads									
a)	Static Load	**To be filled by bidder**	**To be filled by bidder**	**To be filled by bidder**	**To be filled by bidder**	**To be filled by bidder**	**To be filled by bidder**	**To be filled by bidder**	**To be filled by bidder**	**To be filled by bidder**
b)	Dynamic load	**To be filled by bidder**	**To be filled by bidder**	**To be filled by bidder**	**To be filled by bidder**	**To be filled by bidder**	**To be filled by bidder**	**To be filled by bidder**	**To be filled by bidder**	**To be filled by bidder**

c)	Torsional Moment (Nm)	**To be filled by bidder**	**To be filled by bidder**	**To be filled by bidder**	**To be filled by bidder**	**To be filled by bidder**	**To be filled by bidder**	**To be filled by bidder**	**To be filled by bidder**	**To be filled by bidder**
d)	Bending Moment (Nm)	**To be filled by bidder**	**To be filled by bidder**	**To be filled by bidder**	**To be filled by bidder**	**To be filled by bidder**	**To be filled by bidder**	**To be filled by bidder**	**To be filled by bidder**	**To be filled by bidder**
19	Power loading for Auxiliary power consumption	Applicable	Applicable	Applicable	Applicable	Applicable	Not applicable	Not applicable	Not applicable	Not applicable
20	Parameters to be considered compulsarily by bidder for design of Agitators									
a)	Uniform suspension of solids by Agitators	The agitators shall keep the solid particles in suspended mode in liquid slurry with “Full off-Bottom Suspension” of solid particles to 98% of liquid column to virtually “Uniform Solid Concentration”.								
b)	Mounting of Agitator (For Vertical	The Agitators shall be mounted on the Agitator platform which shall be approximately at a height of 1.0 m from the tank roof. However, the Agitator platform is excluded from bidder's scope.								
c)	Power Number for Agitator	0.3 - 0.35	0.3 - 0.35	0.3 - 0.35	0.3 - 0.35	0.3 - 0.35	0.3 - 0.35	0.3 - 0.35	0.3 - 0.35	0.3 - 0.35
d)	Impeller tip dia/ tank dia	1/3 (approx)	1/3 (approx)	1/3 (approx)	1/3 (approx)	1/3 (approx)	-	1/3 (approx)	1/3 (approx)	1/3 (approx)
e)	Minimum number of stage of impeller	1	1	1	1	2	-	1	1	1
Notes										
1	There shall be complete re-suspension of all solids after a 24 hour outage. Accumulation of solids shall not prevent agitator restart.									
2	Agitation shall be provided to prevent settlement of slurry by side entry agitators . All the side-entry agitators shall be similar.									
3	Maximum Sound Pressure Level at a height of 1.5 m above floor level in elevation, and at a distance of 1.0 m horizontally shall be 85 dBA.									
4	*Although the height of all tanks is fixed above, same may vary slightly during detailed engineering as per design calculation of tanks.									
5	Slope of roof shall be considered approximate 5 deg for all the tanks.									

	2 X 250 MW NSPCL BHILAI TPP - FGD TECHNICAL SPECIFICATION FOR AGITATORS	SPECIFICATION No: PE-TS-468-571-18000-A002
		SECTION-II
		ANNEXURE-10
		REV. 00 / Date: SEP. 2020
		SHEET : 1 OF 1

SECTION-II

ANNEXURE-10

Schedule of Guarantees

(TO BE FILLED FOR EACH AGITATOR)

	2 X 250 MW NSPCL BHILAI TPP - FGD TECHNICAL SPECIFICATION FOR AGITATORS	SPECIFICATION No: PE-TS-468-571-18000-A002	
		SECTION : II	
		ANNEXURE-10	
		REV. 00	Date: SEP. 2020
		SHEET : 1 OF 1	

Annexure-IV-Schedule of Guarantees (TO BE FILLED FOR EACH AGITATOR)

Project:

Enquiry No:

Sl. No.	Description	Unit	Data
1	Rated Input Power at Motor Terminal at Normal water level and at Normal voltage and Frequency (*)	KW	
2	Possible Rate of deposit of solid particles at tank bottom of total solid particle inflow/outflow	%	
3	Noise level at a distance of 1.0 meter from the equipment at site	dB(A)	85
4	Maximum vibration velocity (at site) (RMS)	mm/sec	2.3
5	Life of Agitator components parts from the date of Commissioning for continuous operation		24 months
6	Anti-friction Bearing		25000 hrs.

BIDDER SIGN : _____

DESIGNATION :_____

DATE :_____

	2 X 250 MW BHILAI FGD AGITATOR TECHNICAL SPECIFICATION	SPECIFICATION NO. PE-TS-468-571-18000-A002
		SECTION-II
		ANNEXURE-11
		REV. 00
		Date: April, 2020

SECTION-II

ANNEXURE-11
ATTTACHMENT – 3K

4.00.00 Qualifying Requirements for Equipment/Systems

The Bidder / Bidder's sub-vendor(s) is required to meet the provenness criteria and/or qualification requirement for the items/ services listed below as per the stipulated criteria indicated in the respective clauses. For the purpose of qualification of Bidders / Sub-vendor(s), experience shall be reckoned as on the date of consideration for approval but not later than six months to award date of contract to the Main bidder unless otherwise specified in the respective clauses.

4.01.00 **Provenness criteria for critical equipment, auxiliaries, systems and bought out items:**

The Bidder / Bidder's sub-vendor(s) is required to meet the provenness criteria and/or qualification requirement for critical equipments, auxiliaries, systems and bought out items as per criteria stipulated below:

4.01.01 Booster Fans, Slurry Recirculation Pumps, Oxidation Blowers, Wet Limestone Grinding Mills, Slurry Pumps, Agitators & Vacuum Belt Filters for the Wet Limestone based Flue Gas Desulphurisation (FGD) System offered by the Bidder shall be only from such manufacturer(s) who has previously designed (either by itself or under collaboration / licensing agreement), manufactured / got manufactured the respective equipment(s) of the type, application and minimum equipment rating as stipulated below such that the respective equipment(s) should have been in successful operation in at least one (1) plant for a period not less than one(1) year.

Type and Rating for Qualification

Sl. No.	Name of Equipment	Type of Equipment	Application	Equipment Rating
(a)	Booster Fans	Axial type with variable pitch control	Coal fired power plant	Unit size of 660 MW – Flow 610 m3/s (min.) with Head 400 mmwc (min.) & Fan Speed 900 rpm (max.)
				Unit size of 500 MW – Flow 490 m3/s (min.) with Head 400 mmwc (min.) & Fan Speed 900 rpm (max.)
				Unit size of 250 MW & Below – Flow 225 m3/s (min.) with Head 400 mmwc (min.) & Fan Speed 900 rpm (max.)

Sl. No.	Name of Equipment	Type of Equipment	Application	Equipment Rating
(b)	Slurry Recirculation Pumps	Centrifugal type	Wet Limestone based FGD application in Coal fired power plant	Unit size of 500 MW & Above - Flow 10200 m3/hr (min.) with Head 16 Meters of Liquid Column (min.)
				Unit size of 250 MW & Below – Flow 5680 m3/hr (min.) with Head 16 Meters of Liquid Column (min.)
(c)	Oxidation Blowers	Centrifugal/ positive displacement type blower	Wet Limestone based FGD application in Coal fired power plant or any other process application	Unit size of 500 MW & Above - Flow 7300 Nm3/hr Dry Basis (min.) with Head 8500 mmwc (min.) for spray tower process Or Head 3500 mmwc (min.) for bubbling type process
				Unit size of 250 MW & Below - Flow 5000 Nm3/hr Dry Basis (min.) with Head 6500 mmwc (min.) for spray tower process Or Head 3500 mmwc (min.) for bubbling type process
(d)	Wet limestone Grinding mills	Horizontal Wet Ball mill	Wet Limestone based FGD application in Coal fired power plant	Station size of 3000 MW -Capacity 40 T/hr (min.) with pulverizing fineness not less than 90% thru 325 mesh
				Station size of 1980 MW-2000 MW - Capacity 30 T/hr (min.) with pulverizing fineness not less than 90% thru 325 mesh
				Station Size of 1500 MW - Capacity 20 T/hr (min.) with pulverizing fineness

Sl. No.	Name of Equipment	Type of Equipment	Application	Equipment Rating
				not less than 90% thru 325 mesh
				Station size of 500 MW & Below - Capacity 10 T/hr (min.) with pulverizing fineness not less than 90% thru 325 mesh
(e)	Slurry Pumps	Centrifugal type	Wet Limestone based FGD application or ash slurry application in Coal fired power plant	Unit size of 500 MW & Above - Flow 50 m3/hr (min.) with head 30 Meters of Liquid Column (min.)
				Unit size of 250 MW & Below - Flow 25 m3/hr (min.) with head 30 Meters of Liquid Column (min.)
(f)	Agitators	Vertical/Horizontal	Wet Limestone based FGD application in Coal fired power plant	Agitator rating not less than that supplied for 500 MW or higher size unit for similar application
(g)	Vacuum Belt filters	Belt type	Wet Limestone based FGD application in Coal fired power plant or in any other process application	Station size of 3000 MW-Capacity 65 T/hr (min.)
				Station size of 1980 MW-2000 MW-Capacity 50 T/hr (min.)
				Station Size of 1500 MW-Capacity 35 T/hr (min.)
				Station size of 500 MW & Below-Capacity 17 T/hr (min.)

The provenness criteria for equipment (Booster Fans) stipulated at Sl. No. 4.01.01(a) above shall also be considered acceptable provided the rating parameters (i.e., flow, head and rated rpm) is covered within the operating regime of the respective fan performance curve of the reference plant equipment.

The provenness criteria for equipment (Slurry Recirculation Pumps) stipulated at Sl. No. 4.01.01(b) above shall also be considered acceptable provided the rating parameters (i.e., flow and head) is covered within the operating regime of the

respective Slurry Recirculation Pump performance curve of the reference plant equipment.

4.01.02 In case the Bidder or the proposed sub-vendor is not manufacturer of proven Booster Fans as per clause 4.01.01(a) above but is a manufacturer of such equipment for units of at least * MW rating, the Bidder or the proposed sub vendor shall be considered qualified for manufacturing such equipment for ** MW units also, provided it has collaboration or valid licensing agreement for design, engineering, manufacturing, supply of such equipment in India with such manufacturer who meets the requirements stipulated at clause 4.01.01(a) above for the Booster Fans.

For value of * and ** refer table below.

*	**
195	**195/ 250/ 500**
500	**660**

4.01.03 A JV / Subsidiary Company formed for manufacturing and supply of equipment(s) as listed at clause no. 4.01.01 above in India, shall also be considered qualified for manufacturing such equipment(s), provided that it has a valid collaboration or licensing agreement for design, engineering, manufacturing of such equipment(s) in India with a qualified equipment manufacturer who meets the requirements stipulated at clause 4.01.01 above (or the technology provider of the qualified equipment manufacturer) for the respective equipment(s). Before taking up the manufacturing of such equipment(s), the bidder/ his sub-vendor(s) must create /have created manufacturing facilities at his works as per collaborator's/licenser's design, manufacturing and quality control system for such equipment(s).

Further, in such a case, such qualified equipment manufacturers should have, directly or indirectly through its holding company/ subsidiary company, at least 26% equity participation in the Indian Joint Venture Company/ Subsidiary Company, which shall be maintained for a lock-in period of seven (7) years from the date of incorporation of such Joint Venture/ Subsidiary or upto the end of defect liability period of the contract, whichever is later.

4.01.04 In case the Bidder or the proposed sub-vendor is not manufacturer of proven Oxidation Blowers as per clause 4.01.01(c) above but is a manufacturer of Blowers/compressors for minimum 50 NM^3/min capacity, the Bidder or the proposed sub-vendor shall also be considered qualified for manufacturing Oxidation Blowers, provided it has collaboration or valid licensing agreement for design, engineering, manufacturing, supply of such Oxidation Blowers in India with such manufacturer who meets the requirements stipulated at clause 4.01.01(c) above for the Oxidation Blowers. Before taking up the manufacturing of such equipment, the bidder/ his sub-vendor must create /have created manufacturing facilities at his works as per collaborator's /licenser's design, manufacturing and quality control system for such equipments.

CLAUSE NO.	INTENT OF SPECIFICATION
4.01.05 (i)	In case the Bidder or the proposed sub-vendor is not manufacturer of proven Wet limestone Grinding mills as per clause 4.01.01 (d) above but is a manufacturer of dry Grinding mills for power or cement industry of minimum 20 T/h capacity, the Bidder or the proposed sub-vendor shall also be considered qualified for manufacturing Wet limestone Grinding mills, provided it has collaboration or valid licensing agreement for design, engineering, manufacturing, supply of such Wet limestone Grinding mills in India with such manufacturer who meets the requirements stipulated at clause 4.01.01 (d) above for the Wet limestone Grinding mills. Before taking up the manufacturing of such equipment, the bidder/ his sub-vendor must create /have created manufacturing facilities at his works as per collaborator's /licenser's design, manufacturing and quality control system for such equipments. In addition, the Bidder shall be required to furnish a letter of support from Collaborator(s) / Licensor / Technology provider for successful performance of the equipment valid up to the end of defect liability period of the contract as per the format enclosed in the bidding documents, at the time of placement of order on the approved sub-vendor. **OR**
4.01.05 (ii)	In case, the bidder or proposed sub vendor is not a manufacturer of proven Wet Limestone Grinding Mills as per clause 4.01.01(d) above, but have designed, manufactured & supplied dry Grinding Ball Tube mills for at least 500 MW pulverized coal fired power plant, the Bidder or the proposed sub-vendor shall also be considered qualified for manufacturing Wet limestone Grinding Mills provided it has a licensing agreement with a Wet limestone Grinding mills manufacturer who meets the requirements stipulated at clause 4.01.01(d) above for the Wet limestone Grinding mills and provides extended warranty of three (3) years for the Wet Limestone Grinding Mills.
4.01.06	In case the Bidder or the proposed sub-vendor is not manufacturer of proven Agitators as per clause 4.01.01(f) above but is a manufacturer of Agitators for similar process/duty application in petrochemical or metals and mining industry, the Bidder or the proposed sub-vendor shall also be considered qualified for manufacturing Agitators, provided it has collaboration or valid licensing agreement for design, engineering, manufacturing, supply of such Agitators in India with such manufacturer who meets the requirements stipulated at clause 4.01.01(f) above for the Agitators. Before taking up the manufacturing of such equipment, the bidder/ his sub-vendor must create /have created manufacturing facilities at his works as per collaborator's /licenser's design, manufacturing and quality control system for such equipments.
4.01.07	In case the Bidder or the proposed sub-vendor is a manufacturer of Slurry Pumps who meets the requirements stipulated at clause 4.01.01(e) above, the Bidder or the proposed sub-vendor shall also be considered qualified for manufacturing Slurry Recirculation Pumps, provided it has collaboration or valid licensing agreement for design, engineering, manufacturing, supply of such equipment in India with such manufacturer who meets the requirements stipulated at clause 4.01.01(b) above for the Slurry Recirculation Pumps. Before taking up the manufacturing of such equipment, the bidder/ his sub-vendor must create /have created manufacturing facilities at his works as per collaborator's /licenser's design, manufacturing and quality control system for such equipment.

CLAUSE NO.	INTENT OF SPECIFICATION
4.01.08	Before taking up the manufacturing of such equipment(s) as per clause 4.01.02, 4.01.03, 4.01.04, 4.01.05(i), 4.01.06 & 4.01.07 above, the Bidder / its sub vendor(s) must create (or should have created) manufacturing and testing facilities at its works as per Collaborator / licenser's design, manufacturing and quality control system for such equipments duly certified by the Collaborator / licensor. Further, the Collaborator / Licenser shall provide (or should have provided) all design, design calculation, manufacturing drawings and must provide (or should have provided) technical and quality surveillance assistance and supervision during manufacturing, erection, testing, commissioning of equipments.
4.01.09	Bidder shall offer and supply only the type of the above equipment(s) for which it, itself or the manufacturer / Collaborator(s) / Licenser(s) proposed by the Bidder for the above equipment(s) is qualified.
4.01.10	The Employer reserves the right to fully satisfy himself regarding capability and capacity of Bidder / its sub-vendor(s) and the proposed arrangement and may prescribe additional requirement before allowing manufacture of the equipment listed above for this contract.
	Note to clause 4.01.01
	Whenever the term 'coal fired' is appearing above, "Coal" shall be deemed to also include bituminous coal/brown coal/Anthracite Coal/lignite.
4.02.00	**Sub QR for Civil Works:**
4.02.01	Bidder or its agency should have in past executed civil and structural works for * or higher capacity (applicable for project having ** MW unit rating) coal based/Lignite based power plant including earthwork in filling involving mechanical compaction and cutting in hard rock, piling, foundations, Bulk material handling plant involving underground storage hopper and underground tunnels.
4.02.02	Bidder can engage more than one agency, in case the Bidder itself is not able to meet the requirement at 4.02.01. The agency being engaged for a particular work should have in the past executed such works of * or higher capacity plant (applicable for project having ** MW unit rating).
4.02.03	For Chimney, Bidder or its agency should have in the past built at least one (1) reinforced concrete chimney of minimum 100m height.
4.02.04	In case Bidder or its agency do not meet the requirements at 4.02.01 and the Bidder proposes to engage agency (ies) for civil & structural works on work volume basis (except for Chimney), Bidder or its agency (ies) should have executed such works in the past and the annual rate of execution in the reference works should not be less than eighty percent (80%) of the asking rate of such works, (structural steel fabrication, erection, RCC, earthwork in filling involving mechanical compaction and

FLUE GAS DESULPHURISATION (FGD) SYSTEM PACKAGE
FOR
LOT-2 PROJECTS
BIDDING DOCUMENT NO. CS-0011-109(2)-9

Bidder's Name and Address:

To
Contract Services-I
NTPC Limited
Noida-201301

Summary of Critical Equipment indicated under clause 4.01.00, sub-section-I, Part-A of Section-VI.

Equipment Name	Sub-Vendor Name	Collaborator's Name, if applicable	Seeking Qualification as per clause..... Sub-Section-I, Part-A of Section-VI
~~Booster Fans~~			~~*4.01.01 /*4.01.02 /*4.01.03~~
~~*Slurry Recirculation Pumps~~			~~*4.01.01 /*4.01.03 /*4.01.07~~
~~Oxidation Blowers~~			~~*4.01.01 /*4.01.03 /*4.01.04~~
~~Wet limestone Grinding mills~~			~~*4.01.01 /*4.01.03 /*4.01.05 (i)/ 4.01.05 (ii)~~
~~Slurry Pumps~~			~~*4.01.01/*4.01.03~~
Agitators			*4.01.01 /*4.01.03 /*4.01.06
~~Vacuum Belt filters~~			~~*4.01.01 /*4.01.03~~

Note : *Strike-off whichever is not applicable.

Signature of authorized signatory.....

1. If qualification sought as per clause 4.01.01, sub-section-I-A, Part-A of Section-VI then the details of the sub vendor (manufacturer) shall be filled by the bidder in the format A to G.

2. If the qualification sought as per the clause 4.01.02, sub-section-I-A, Part-A of Section-VI, then the details of proposed sub vendor (i.e manufacturer of such equipment for at least *195/*250/*500//*660 MW unit rating) shall be filled individually by the bidder in the format A and the details of collaborator who meets the requirement stipulated at 4.01.01, sub-section-I-A, Part-A of Section-VI shall also be filled by the bidder in the format A separately. Further, in case of qualification vide clause 4.01.02, sub-section-I-A, Part-A of Section-VI a copy of valid ongoing collaboration and technology transfer agreement for design, engineering, manufacturing, supply of such equipment in India with the collaborator who meets the requirement stipulated at 4.01.01, sub-section-I-A, Part-A of Section-VI shall also be furnished.

3. If the qualification sought as per the clause 4.01.03, sub-section-I-A, Part-A of Section-VI then the details of JV/Subsidiary Company formed for manufacturing of such equipment in India shall be furnished individually for each equipment by the bidder such as,

   i) Copy of document of incorporation of JV/Subsidiary company in India

   ii) Copy of valid ongoing collaboration and technology transfer agreement for design, engineering, manufacturing, supply of such equipment in India with the collaborator who meets the requirement stipulated at 4.01.01, sub-section-I-A, Part-A of Section-VI.

   iii) Copy of document of at least 26% equity participation of qualified equipment manufacturer in the Indian JV company/subsidiary company directly or indirectly through its holding company /Subsidiary company, which shall be maintained for a lock -in period of seven (7) years from the date of incorporation of such JV/subsidiary or up to the end of defect liability period of the contract which ever is later.

   Further, the details of collaborator or technology provider of the qualified equipment manufacturer who meets the requirement stipulated at 4.01.01, sub-section-I-A, Part-A of Section-VI shall be filled by the Bidder in the format A to G (format given at 1.00.00). In addition to that, the sub vendor along with the Indian JV company/subsidiary company, qualified equipment manufacturer and its holding company/subsidiary company as applicable shall furnish the Letter of Support as per the format enclosed at Annexure-I.

*** strike out whichever is not applicable.**

1.00.00 (Applicable for Bidder/his sub vendors seeking qualification as per clause no. 4.01.01, Sub section-I, Part-A of Section-VI. Bidder shall furnish the required data only for those equipments / auxiliaries which are proposed to be sourced under this route.)

Signature of authorized signatory.....

We, hereby furnish the data on proveness criteria for critical equipment, auxiliaries, systems and Bought Out Items such as Booster Fans, *Slurry Recirculation Pumps, Oxidation Blowers, Wet Limestone Grinding Mills, Slurry Pumps, & Agitators which have been designed (either by self manufacturer or under valid ongoing collaboration and technology transfer agreement), *manufactured/ *got manufactured and supplied by us /Manufacturer (or manufactured/ got manufactured & supplied by our proposed sub-vendors) and these are in successful operation in at least one (1) plant for a period not less than one year reckoned as on the date of consideration for approval but not later than six months to award date of contract to the Main bidder. The details of type and minimum equipment rating of such equipment are given below :

A. **For Booster Fans:** We declare that, we/our Sub-Vendor, have designed (either by itself or under collaboration / licensing agreement),*manufactured/*got manufactured and supplied at least one (1) number of Booster Fan of required flow & head of the offered Booster Fan with Fan Speed 900 rpm (maximum), Axial type with variable pitch control working in a Coal fired power plant and which has been in successful operation for minimum one(1) year reckoned as on the date of consideration for approval but not later than six months to award date of contract to the Main bidder, as per the details furnished below:

Sl. No.	Description	Reference Work
1.	Name of the reference plant & location:	
2.	Client name and his address:	
3.	No. of units and capacity in MW of unit:	
4.	Whether equipment operating in a coal fired power plant	-*Yes/*No
5.	Name of equipment manufacturer & address:	

Signature of authorized signatory.....

F. **Agitators:** We declare that, we/our Sub-Vendor, have designed (either by itself or under collaboration / licensing agreement),*manufactured/*got manufactured and supplied at least one (1) number of Agitators with rating not less than that supplied for 500 MW or higher size unit for similar application, Vertical/Horizontal type working in Wet Limestone based FGD application in Coal fired power plant and which has been in successful operation for minimum one(1) year reckoned as on the date of consideration for approval but not later than six months to award date of contract to the Main bidder, as per the details furnished below::

Sl. No.	Description	Reference Work
1.	Name of the reference plant & location:	
2.	Client name and his address:	
3.	No. of units and capacity in MW of unit:	
4.	Whether power plant is coal fired	-*Yes/*No
5.	Whether operating in a Wet Limestone based FGD application in coal fired power plant	-*Yes/*No
6.	Name of equipment manufacturer & address:	
7.	Date of commission of the equipments:	
8.	Model no. of the equipment:	
9.	Brief Technical particulars of the equipments:	
10.	Agitators supplied for	……..MW unit size

Signature of authorized signatory.....

Sl. No.	Description	Reference Work
11.	Whether the equipment(s) are in successful operation in atleast one(01) plant for a period not less than one(01) year reckoned as on the date of consideration for approval but not later than six months to award date of contract to the Main bidder	-*Yes/*No
12.	Flue gas Desulphurization system details:	*Technical extract/ *paper letter/ *email/ *Drwaing from user or *contract docu ment or *scheme or *any document in public domain enclosed at annexure....to Attachment-3K
13.	Scope of Work:	*Letter of Award or *Contract or *P.O. enclosed at Annexure.....to Attachment-3K
14.	Performance details:	*Certificate/*Letter/*E-mail from End user enclosed at Annexure.....to Attachment-3K

*** Strike off whichever is not applicable.**

Signature of authorized signatory.....

***7.00.00** **Applicable for Bidder/his sub vendors seeking provenness criteria as per clause no. 4.01.06, Sub section-I, Part-A of Section-VI.**

7.01.00 We, hereby confirm that *we/*our sub-vendors is a manufacturer of a manufacturer of Agitators for similar process/duty application in petrochemical or metals and mining industry. (Details of references enclosed at Annexure ……)

(Data to be furnished in line with format given at 1.00.00 of this Attachment))

7.02.00 We further confirm that details in respect of collaboration / valid licencing agreement for the Agitator between *us/*our sub-vendors, as per 6.01.00 above, and with qualified Agitator manufacturer, who meets the requirement stipulated at clause **4.01.01**, sub-section-I, Part-A, Section-VI are enclosed at **Annexure-…..** to this Attachment. The data in respect of proveneness criteria for the qualified Agitator manufacturer, which is in successful operation in at least one (1) plant for a period not less than one reckoned as on the date of consideration for approval but not later than six months to award date of contract to the Main bidder are furnished below.

We further confirm that before taking up the manufacturing of such Agitator, *we/ *our sub vendor(s) *will create /*have created manufacturing facilities at his works as per collaborator's/licenser's design, manufacturing and quality control system.

(Data to be furnished in line with format given at 1.00.00 of this Attachment)

Signature of authorized signatory.....